Allmand™

Brighter. Warmer. Safer.

Portable Industrial Heaters

Portable Light Towers

Portable Light Stands

Solar Flashing Arrow Boards

en

Wire Schematic Manual
50 & 60Hz NIGHT-LITE PRO II™

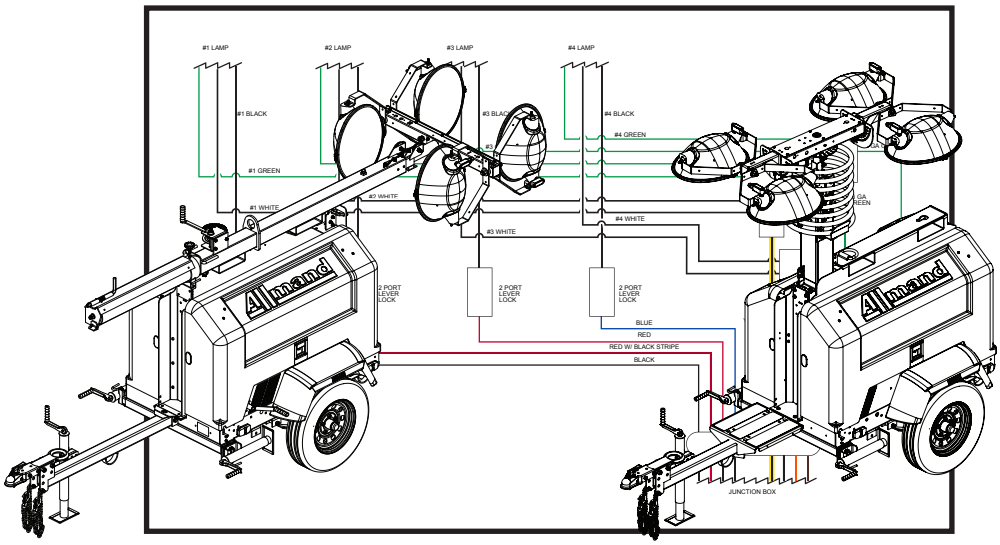

Copyright © 2016 Allmand Bros., Inc.
Holdrege, NE, USA. All rights reserved.

Part No.: 108811
Revision: A

LIGHT TOWER APP

Download on the App Store

ANDROID APP ON Google play

Reliability, Performance, and Integrity Since 1938

www.allmand.com

TABLE OF CONTENTS

SLS Key Start Schematic (105894) .....(1.1)
LSC Schematic (105895) .....(1.2)
CAT C1.1 Schematic (105888) .....(1.3)
CAT C1.1 Voltage Regulator Schematic (105899) .....(1.4)
CAT C1.1 LSC Schematic (105904) .....(1.5)
Kubota D1005/1105 Schematic (105893) .....(1.6)
Kubota D1005/1105 LSC Schematic (105905) .....(1.7)
Shocker Valve Schematic (106156) .....(1.8)
Low Fuel Module Schematic (105901) .....(1.9)
Low Fuel Beacon Schematic (105897) .....(1.10)
Low Fuel Sender Schematic (106341) .....(1.11)
Heated Fuel/Water Separator (105886) .....(1.12)
4 Light 14/7 Cord Schematic (105291) .....(1.13)
4 Light 16/8 Cord Schematic (105292) .....(1.14)
4 Light LED Schematic (105713) .....(1.15)
4 Light LED Disconnect Schematic (106157) .....(1.16)
4 Light Relay Schematic (105898) .....(1.17)
1000W 60Hz 120V Ballast Schematic (105287) .....(1.18)
1000W 50Hz 120V Ballast Schematic (105289) .....(1.19)
1250W 60Hz 120V Ballast Schematic (105286) .....(1.20)
Up/Down Momentary Switch Schematic (105935) .....(1.21)
Up/Down Momentary Switch w/ Alarm Schematic (105936) .....(1.22)
Push Switch Schematic (106154) .....(1.23)
Int'l Generator to Lights Schematic (106337) .....(1.24)
Int'l Schuko Panel Schematic (105513) .....(1.25)
Int'l Tail Light Schematic (105502) .....(1.26)
Tail Light Schematic (107266) .....(1.27)
Marker Lights Schematic (107267) .....(1.28)
Interior Work Light Schematic (105896) .....(1.29)
LED Driver 4 Light Schematic (105632) .....(1.30)
License Plate LED Lamp Schematic (105350) .....(1.31)
SLS 1.1 Relay Addition Schematic (106877) .....(1.32)
LSC 2.1 120V Transformer Schematic (106885) .....(1.33)

©2016 Allmand™ Bros., Inc.

TABLE OF CONTENTS

2-20AMP GFCI Schematic (107599) .....(1.34)
1-20AMP GFCI Schematic (107620) .....(1.35)
2-30AMP RV Schematic (107624) .....(1.36)
1-30AMP RV 1-20AMP GFCI Schematic (107621) .....(1.37)
1-30AMP Twistlock 1-20AMP GFCI Schematic (107628) .....(1.38)
No Outlet Schematic (107627) .....(1.39)
GPS ZTR System Schematic (105345) .....(1.40)
Emergency Stop Schematic (105903) .....(1.41)
102 Decibel Alarm Schematic (108035) .....(1.42)

©2016 Allmand™ Bros., Inc.

WIRE SCHEMATIC PAGE CONNECTION TABLE (1 of 4)

Schematic Page	1st Connection Page(s)	2nd Connection Page(s)	3rd Connection Page(s)	4th Connection Page(s)
SLS Key Start Schematic	1.40	1.9, 1.12, and/or 1.29	1.4	1.32
LSC Schematic	1.10	1.33	1.11	1.12 and/or 1.29

Schematic Page	5th Connection Page(s)	6th Connection Page(s)	7th Connection Page(s)	8th Connection Page(s)
SLS Key Start Schematic	1.17	1.3 or 1.6	1.3 or 1.6	1.3, 1.4, and/or 1.6
LSC Schematic	1.4	1.5 or 1.7	1.4, 1.5, and/or 1.7	1.17

Schematic Page	9th Connection Page(s)	10th Connection Page(s)	11th Connection Page(s)	12th Connection Page(s)
LSC Schematic	1.5 or 1.7	1.42	1.4	n/a

Schematic Page	1st Connection Page(s)	2nd Connection Page(s)	3rd Connection Page(s)	4th Connection Page(s)
CAT C1.1 Schematic	1.1 and 1.4	1.11	1.1	1.1
CAT C1.1 Voltage Regulator Schematic	1.3 or 1.5	1.1 or 1.2	n/a	n/a
CAT C1.1 LSC Schematic	1.2 or 1.4	1.11	1.2	1.2
Kubota D1005/1105 Schematic	1.1	1.11	1.1	1.1
Kubota D1005/1105 LSC Schematic	1.2	1.11	1.2	1.2
Shocker Valve Schematic	n/a	n/a	n/a	n/a

©2016 Allmand™ Bros., Inc.

WIRE SCHEMATIC PAGE CONNECTION TABLE (2 of 4)

Schematic Page	1st Connection Page(s)	2nd Connection Page(s)	3rd Connection Page(s)	4th Connection Page(s)
Low Fuel Module Schematic	1.11	1.10	1.1	n/a
Low Fuel Beacon Schematic	1.2 or 1.9	n/a	n/a	n/a
Low Fuel Sender Schematic	1.2, 1.3, or 1.6	n/a	n/a	n/a
Heated Fuel/Water Separator	1.1 or 1.2	n/a	n/a	n/a
4 Light 14/7 Cord Schematic	1.18, 1.19, or 1.20	n/a	n/a	n/a
4 Light 16/8 Cord Schematic	1.18, 1.19, or 1.20	n/a	n/a	n/a
4 Light LED Schematic	1.30	n/a	n/a	n/a
4 Light LED Disconnect Schematic	1.30	n/a	n/a	n/a
4 Light Relay Schematic	1.1 or 1.2	1.18, 1.19, 1.20, or 1.30	1.34, 1.35, 1.36, 1.37, 1.38, or 1.39	n/a
1000W 60Hz 120V Ballast Schematic	1.13, 1.14, or 1.17	n/a	n/a	n/a
1000W 50Hz 120V Ballast Schematic	1.13, 1.14, or 1.17	n/a	n/a	n/a
1250W 60Hz 120V Ballast Schematic	1.13, 1.14, or 1.17	n/a	n/a	n/a
Up/Down Momentary Switch Schematic	1.23	n/a	n/a	n/a
Up/Down Momentary Switch w/ Alarm Schematic	1.23	n/a	n/a	n/a

©2016 Allmand™ Bros., Inc.

WIRE SCHEMATIC PAGE CONNECTION TABLE (3 of 4)

Schematic Page	1st Connection Page(s)	2nd Connection Page(s)	3rd Connection Page(s)	4th Connection Page(s)
Push Switch Schematic	1.21 or 1.22	n/a	n/a	n/a
Int'l Generator to Lights Schematic	1.25	n/a	n/a	n/a
Int'l Schuko Panel Schematic	1.24	n/a	n/a	n/a
Int'l Tail Light Schematic	n/a	n/a	n/a	n/a
Tail Light Schematic	1.31	1.28	n/a	n/a
Marker Lights Schematic	1.27	n/a	n/a	n/a
Interior Work Light Schematic	1.1 or 1.2	n/a	n/a	n/a
LED Driver 4 Light Schematic	1.17	1.15 or 1.16	n/a	n/a
License Plate LED Lamp Schematic	1.27	n/a	n/a	n/a
SLS 1.1 Relay Addition Schematic	1.17, 1.34, 1.35, 1.36, 1.37, 1.38, or 1.39	1.1	n/a	n/a
LSC 2.1 120V Transformer Schematic	1.17, 1.34, 1.35, 1.36, 1.37, 1.38, or 1.39	1.2	n/a	n/a
2-20AMP GFCI Schematic	1.17	n/a	n/a	n/a
1-20AMP GFCI Schematic	1.17	n/a	n/a	n/a
2-30AMP RV Schematic	1.17	n/a	n/a	n/a

©2016 Allmand™ Bros., Inc.

WIRE SCHEMATIC PAGE CONNECTION TABLE (4 of 4)

Schematic Page	1st Connection Page(s)	2nd Connection Page(s)	3rd Connection Page(s)	4th Connection Page(s)
1-30AMP RV 1-20AMP GFCI Schematic	1.17	n/a	n/a	n/a
1-30AMP Twistlock 1-20AMP GFCI Schematic	1.17	n/a	n/a	n/a
No Outlet Schematic	1.17	n/a	n/a	n/a
GPS ZTR System Schematic	1.1	n/a	n/a	n/a
Emergency Stop Schematic	1.3, 1.5, 1.6, or 1.7	n/a	n/a	n/a
102 Decibel Alarm Schematic	1.2	n/a	n/a	n/a

©2016 Allmand™ Bros., Inc.

1.1 - SLS Key Start Schematic

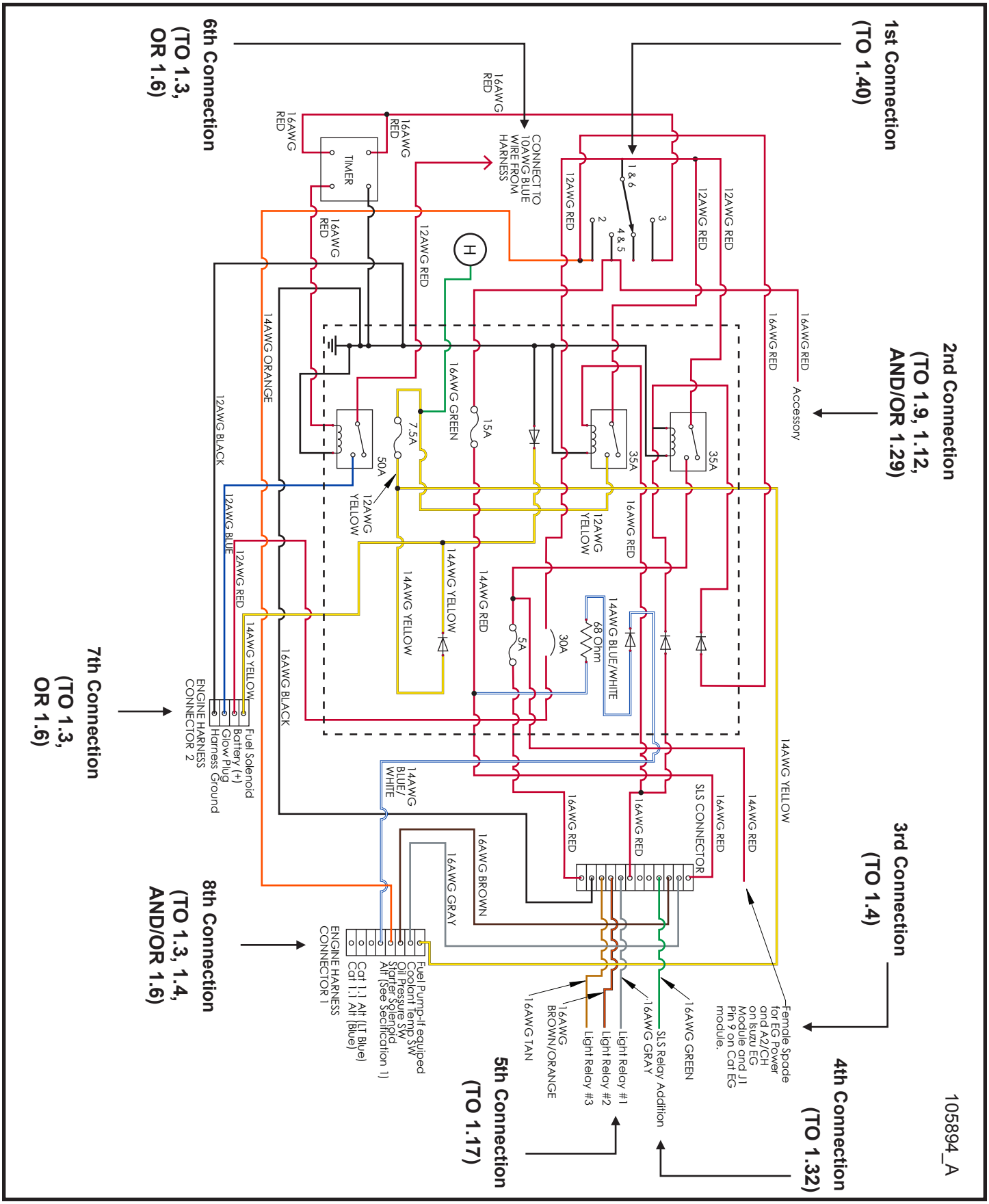

©2016 Allmand™ Bros., Inc.

1.2 - LSC Schematic

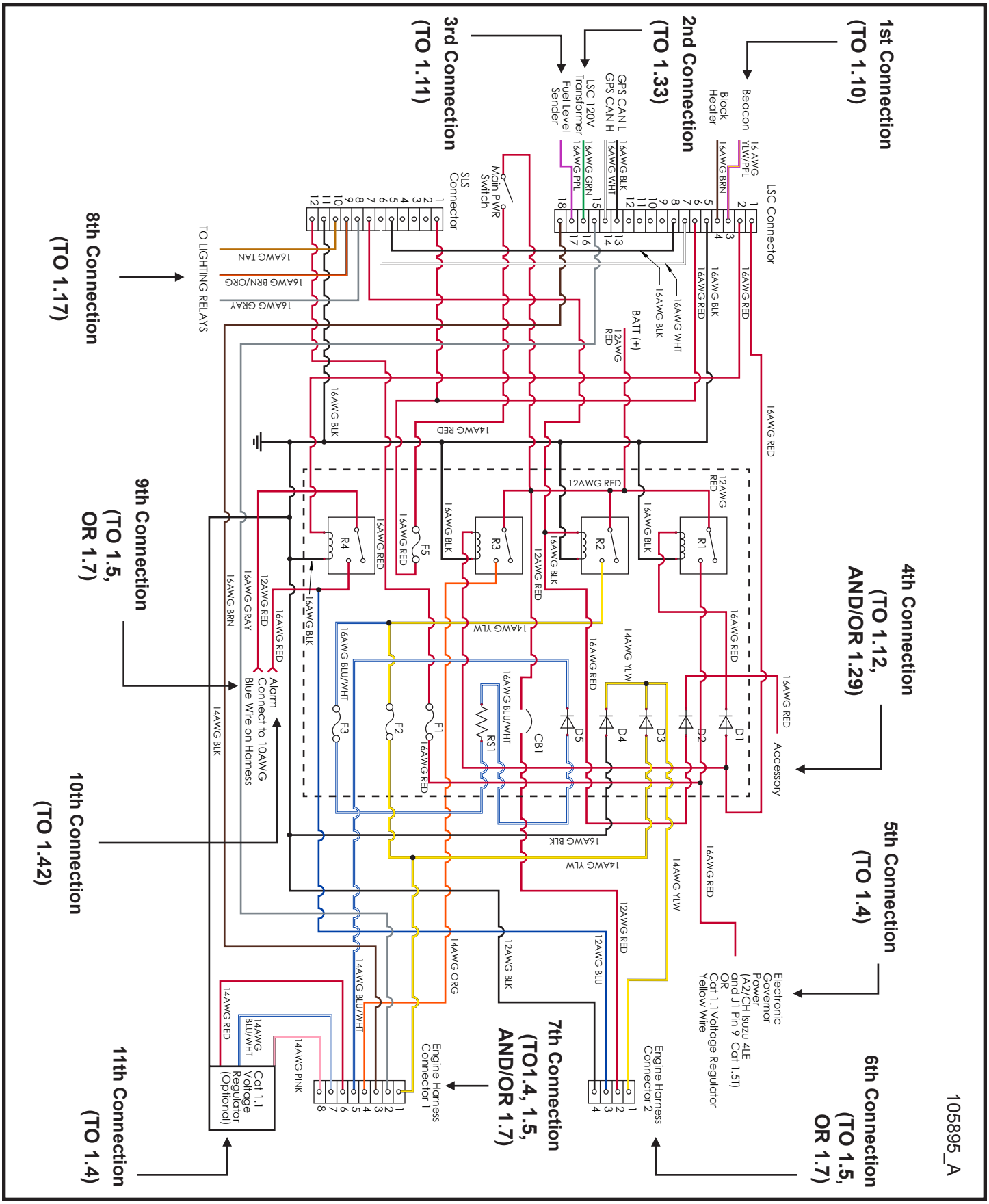

©2016 Allmand™ Bros., Inc.

1.3 - CAT C1.1 Schematic

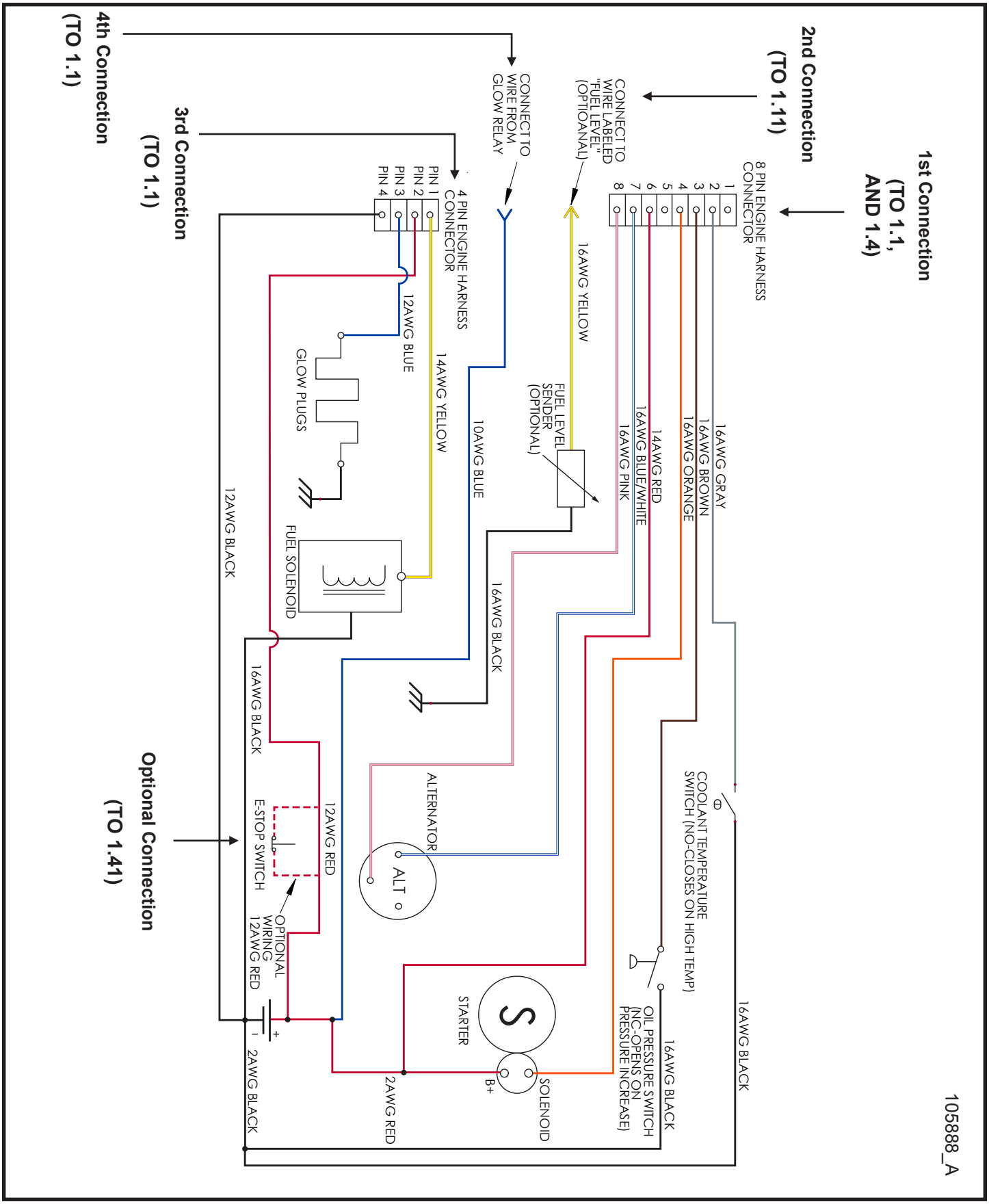

©2016 Allmand™ Bros., Inc.

1.4 - CAT C1.1 Voltage Regulator Schematic

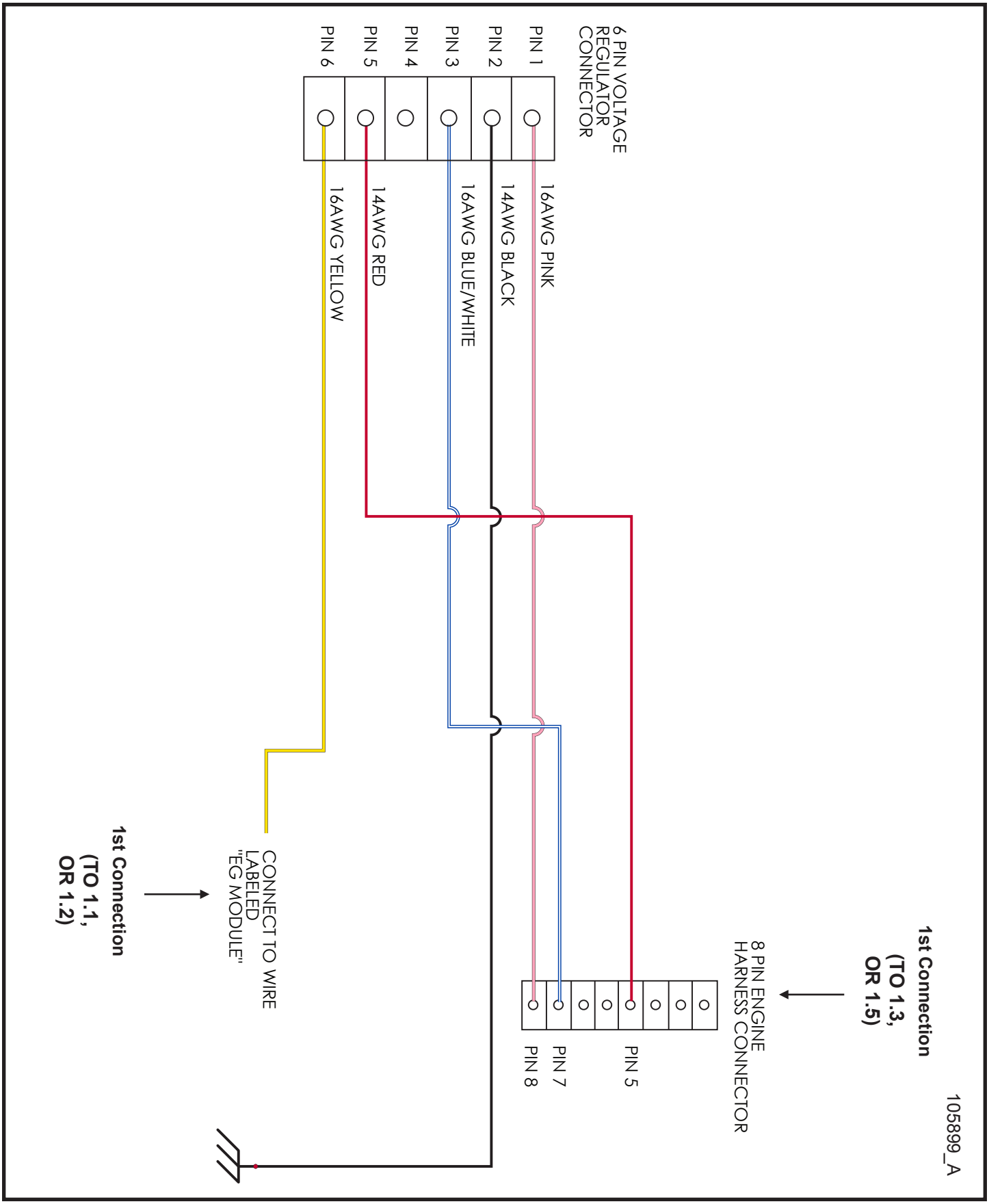

©2016 Allmand™ Bros., Inc.

1.5 - CAT C1.1 LSC Schematic

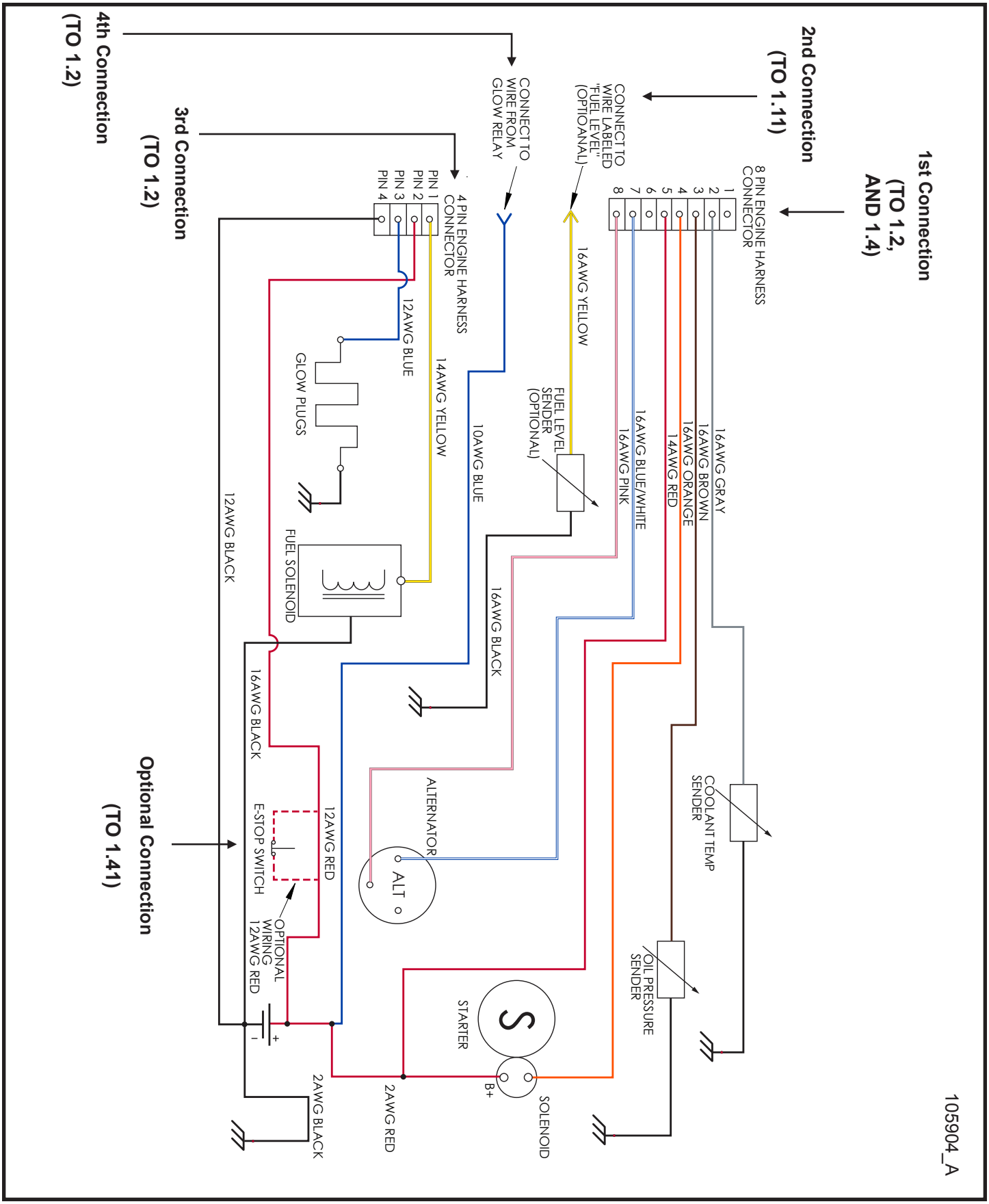

©2016 Allmand™ Bros., Inc.

1.6 - Kubota D1005/1105 Schematic

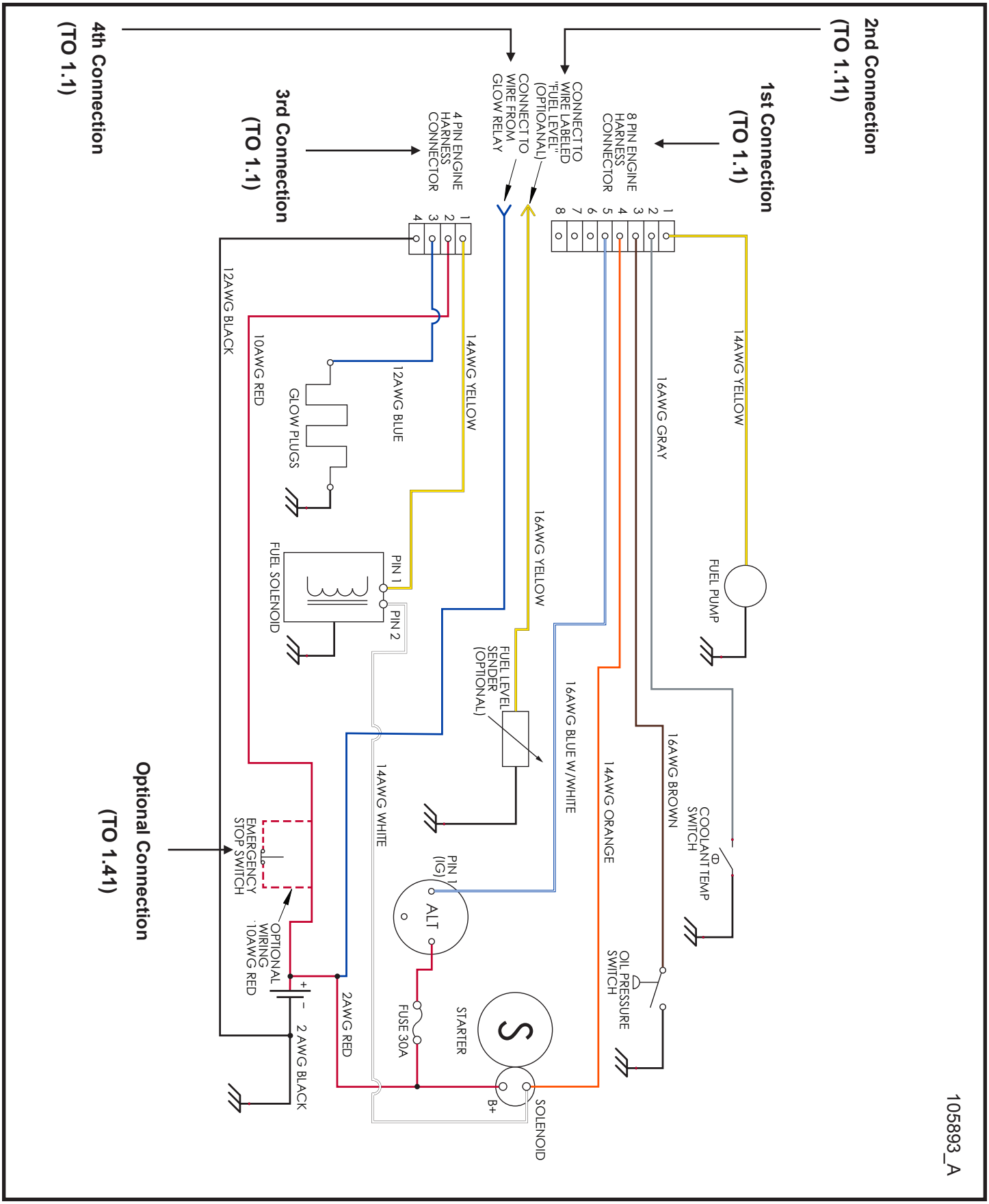

©2016 Allmand™ Bros., Inc.

1.7 - Kubota D1005/1105 LSC Schematic

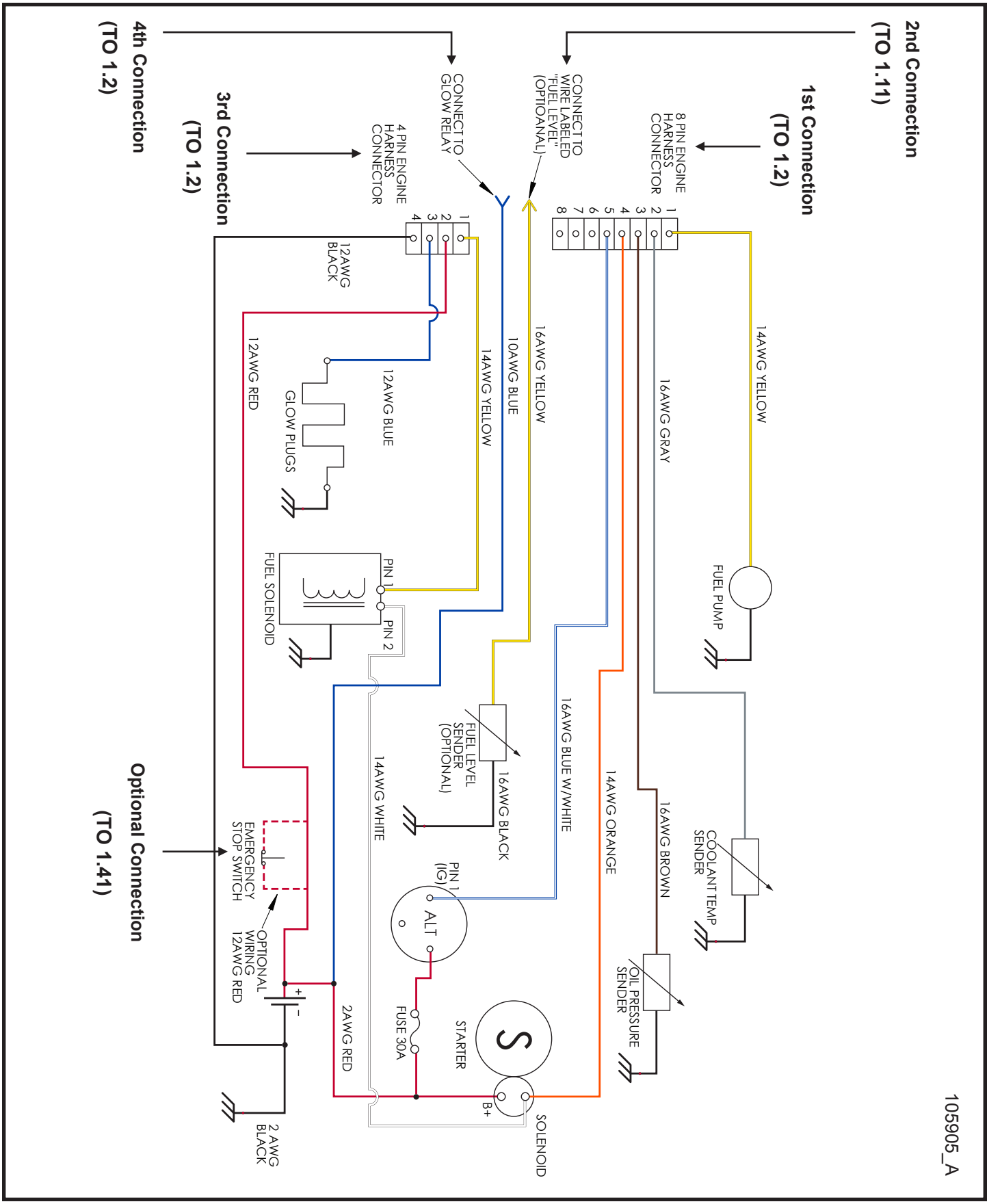

©2016 Allmand™ Bros., Inc.

1.8 - Shocker Valve Schematic

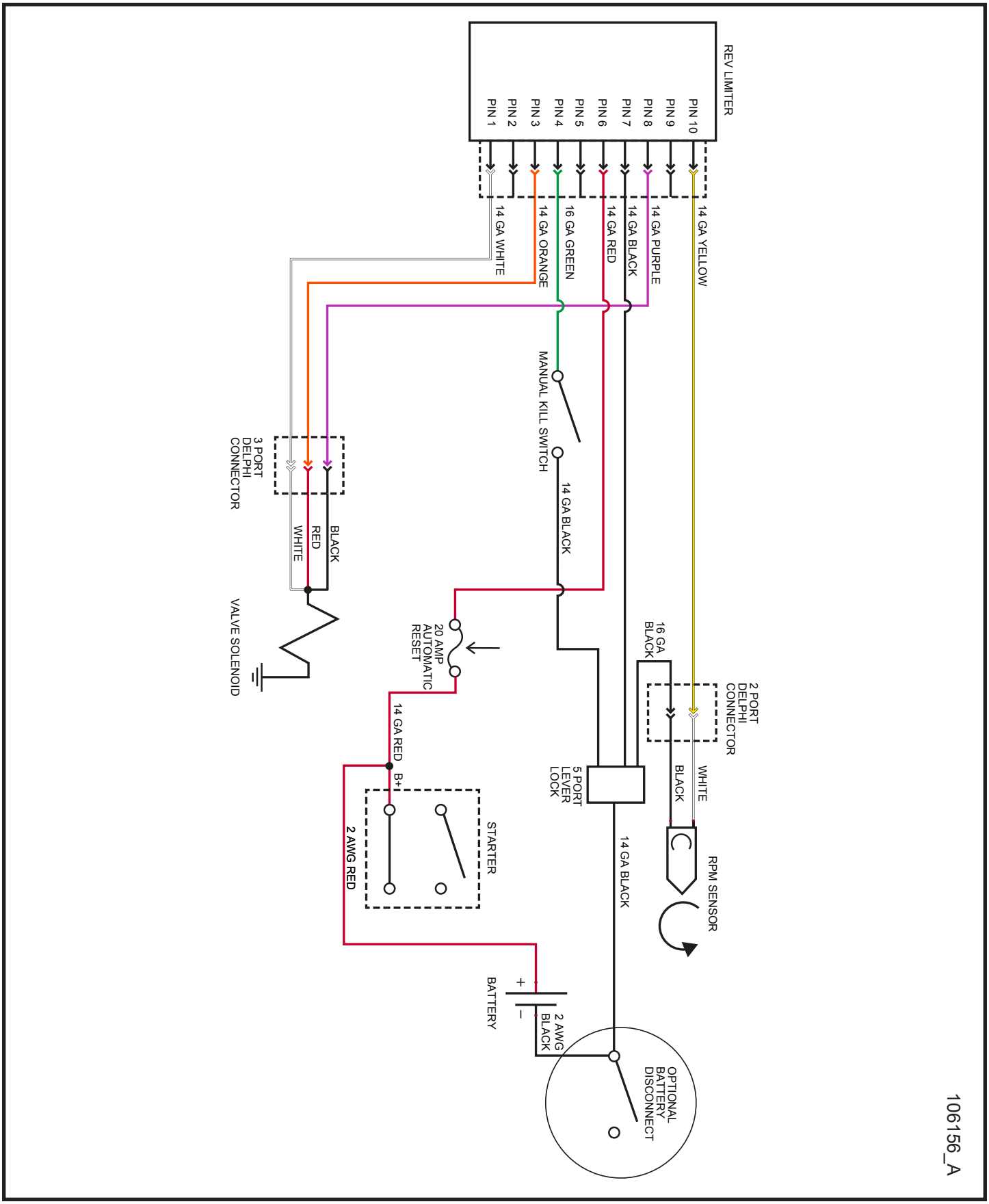

©2016 Allmand™ Bros., Inc.

1.9 - Low Fuel Module Schematic

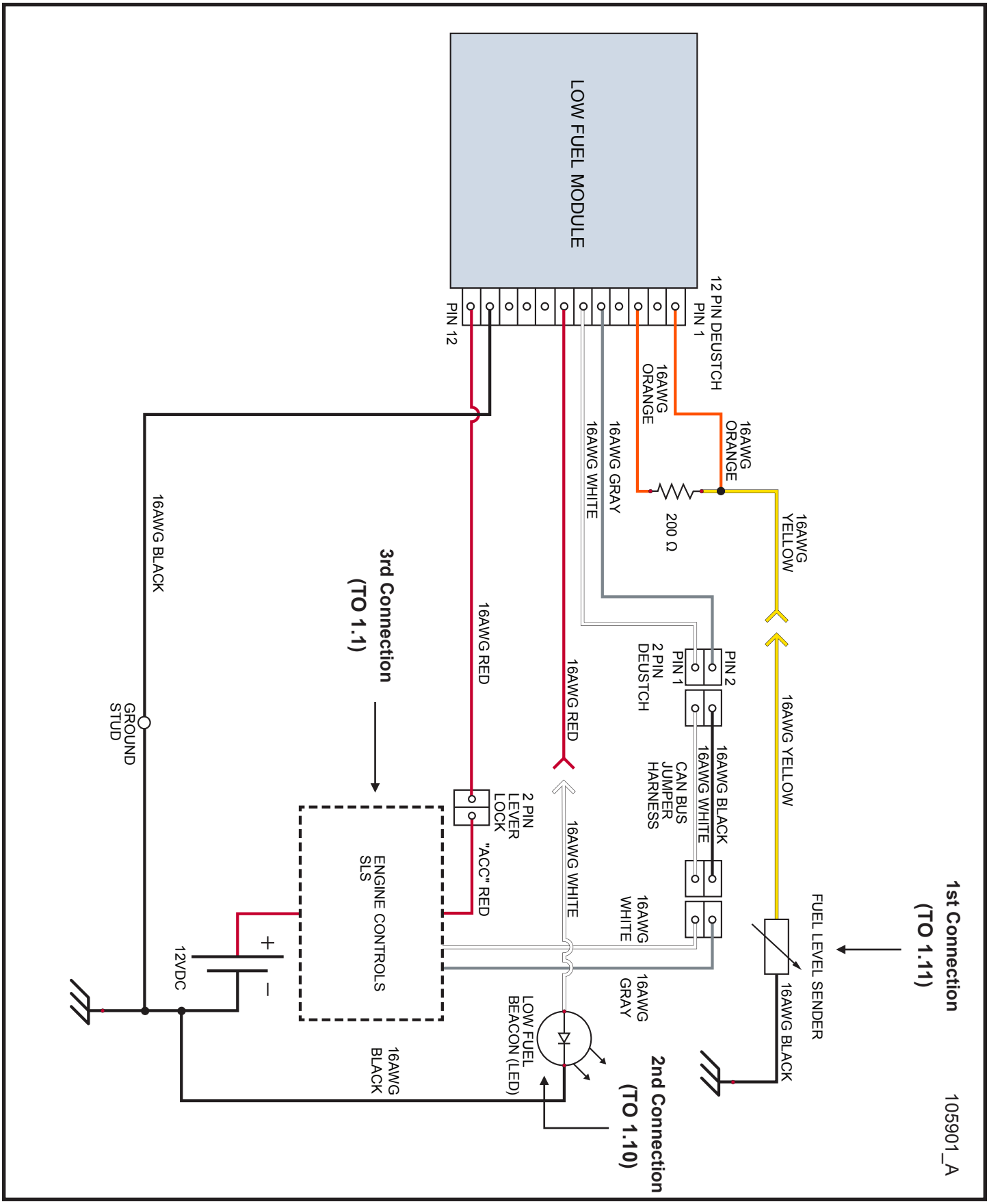

©2016 Allmand™ Bros., Inc.

1.10 - Low Fuel Beacon Schematic

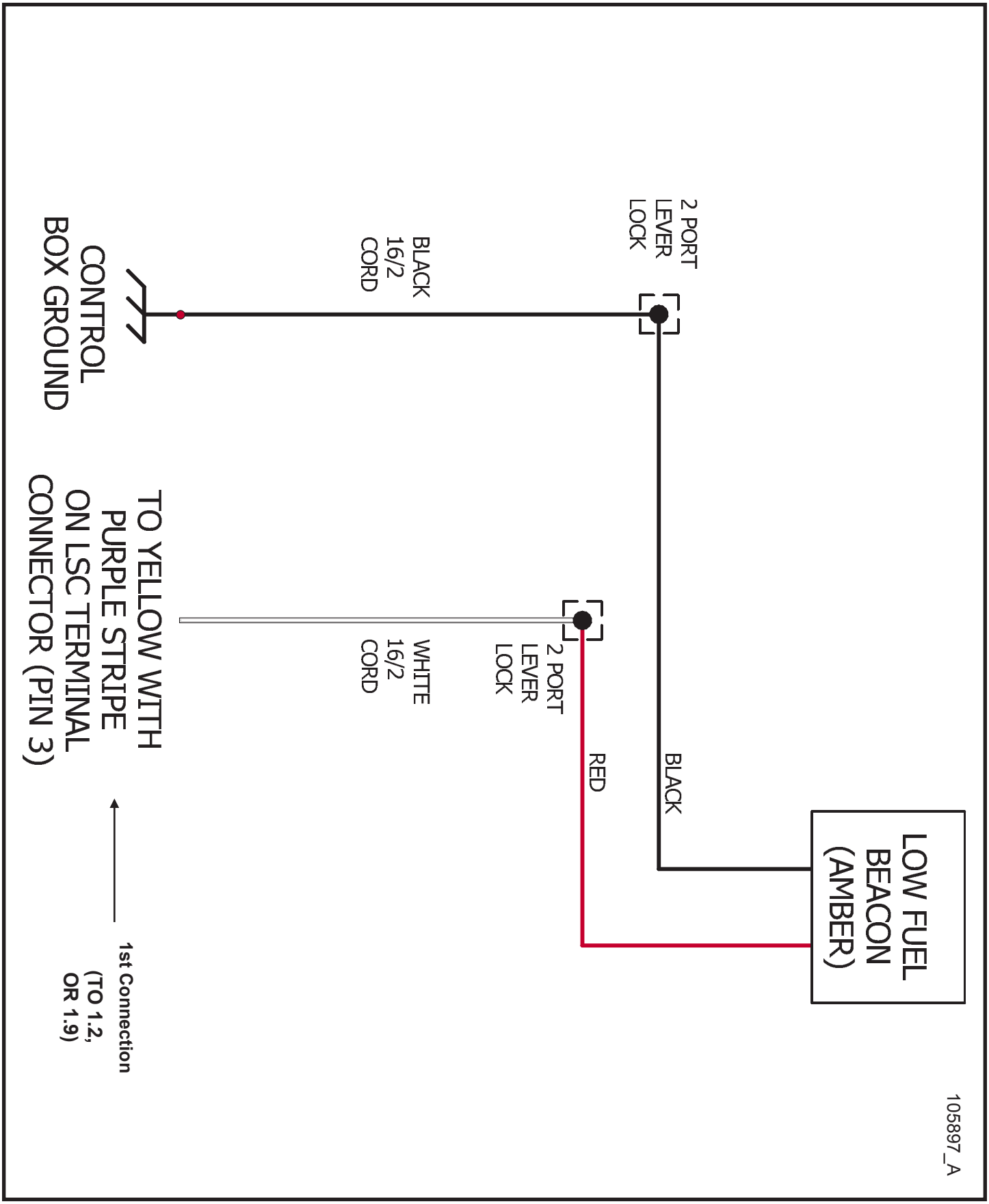

©2016 Allmand™ Bros., Inc.

1.11 - Low Fuel Sender Schematic

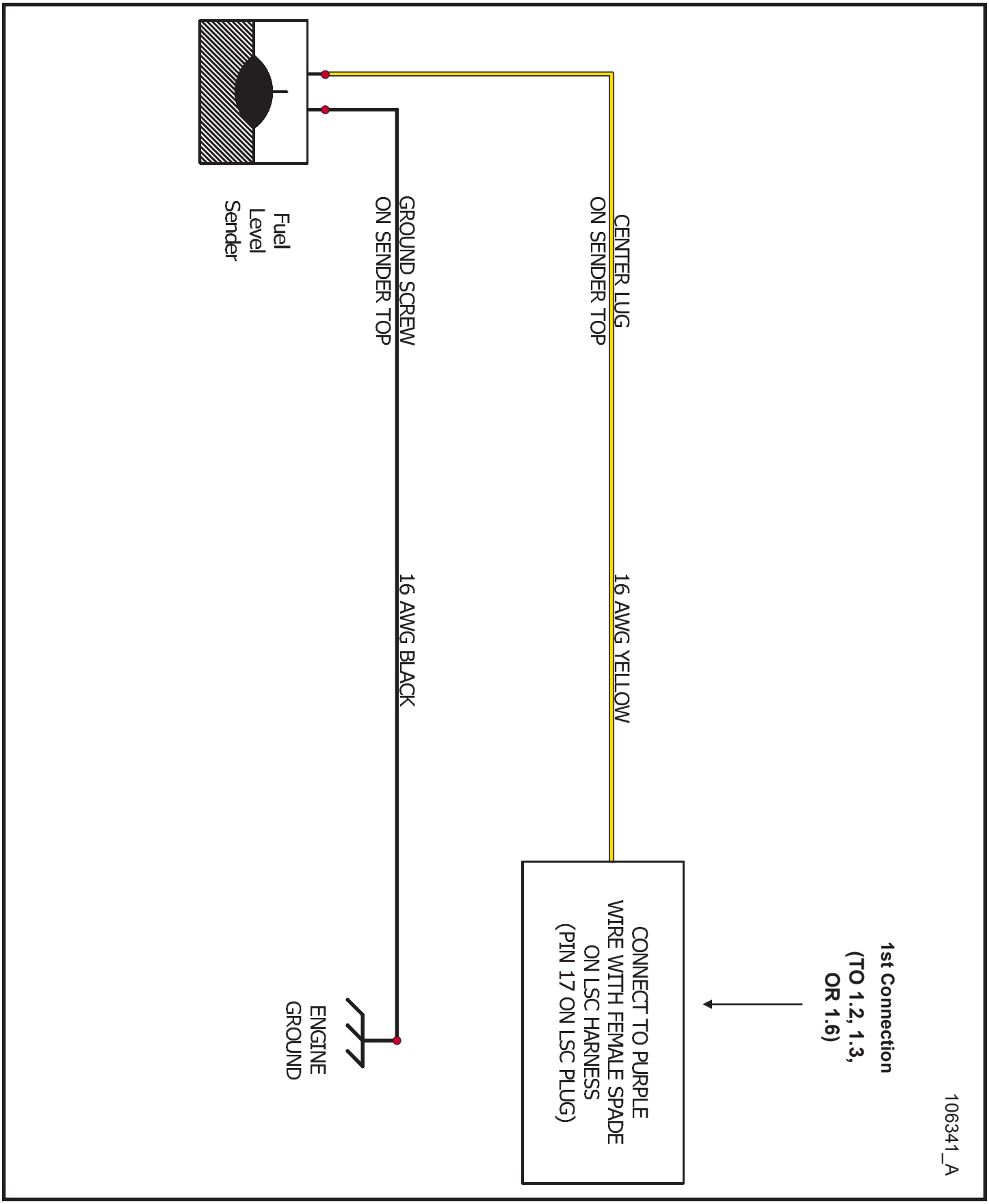

©2016 Allmand™ Bros., Inc.

1.12 - Heated Fuel/Water Separator Schematic

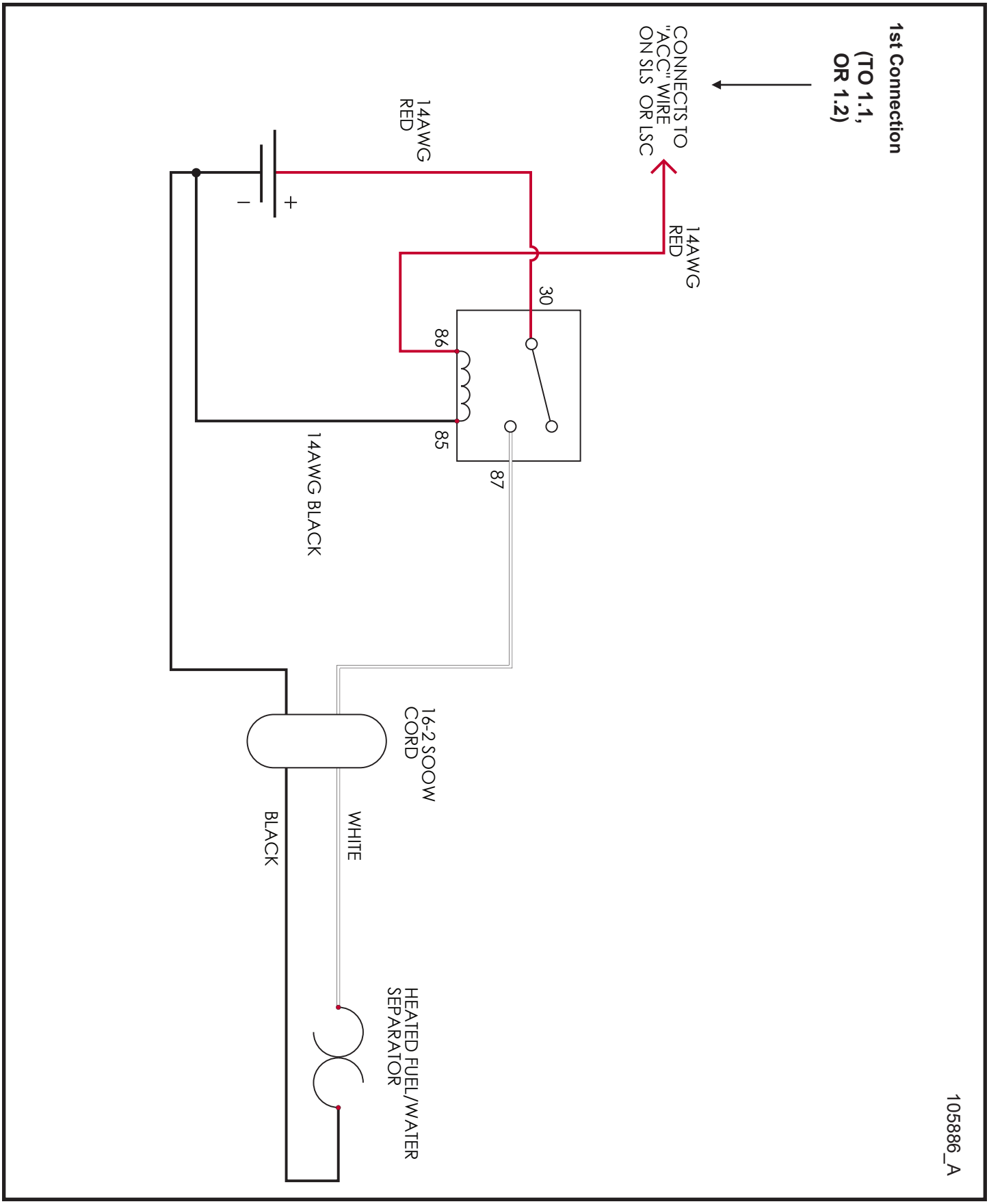

©2016 Allmand™ Bros., Inc.

1.13 - 4 Light 14/7 Cord Schematic

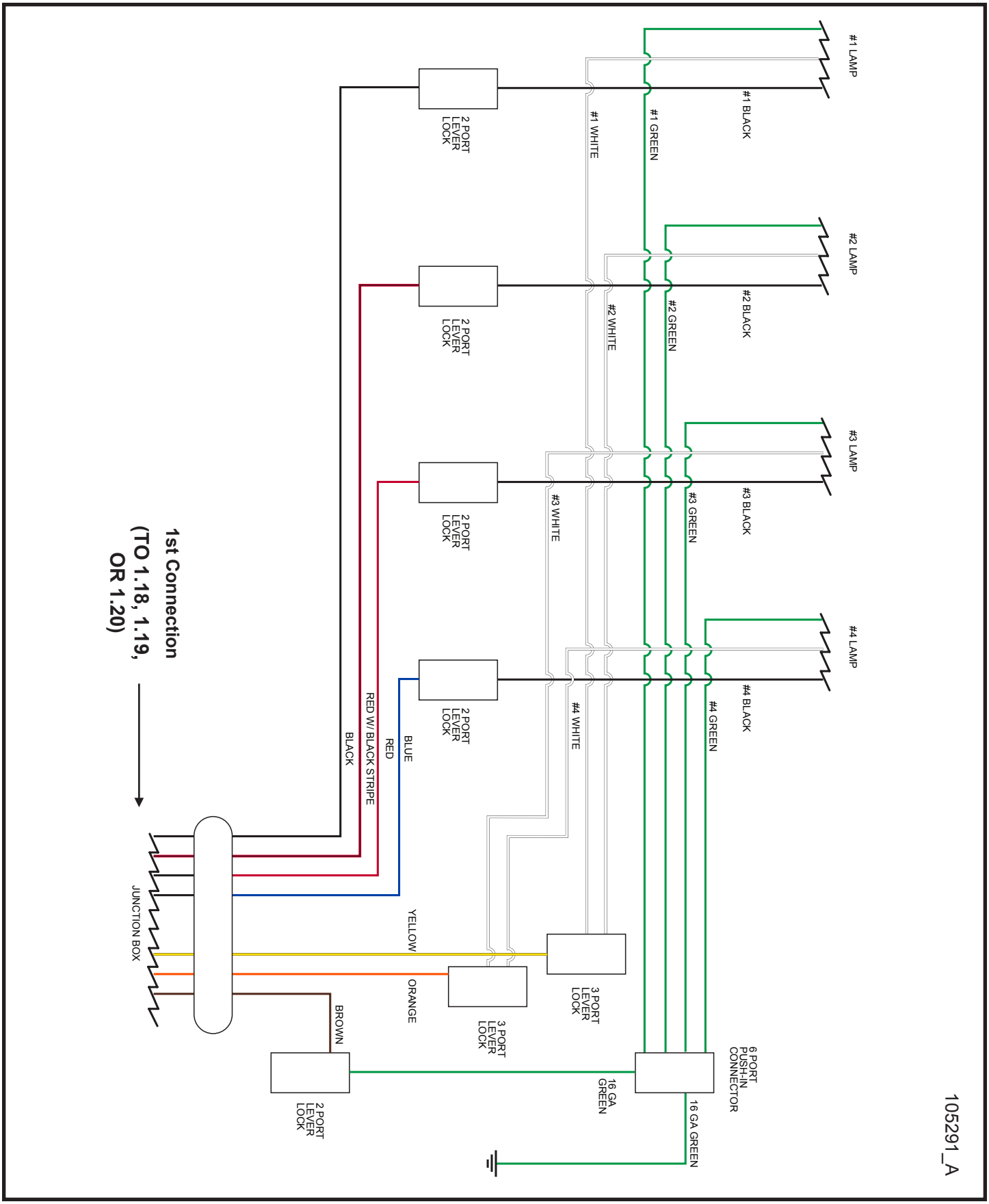

©2016 Allmand™ Bros., Inc.

1.14 - 4 Light 16/8 Cord Schematic

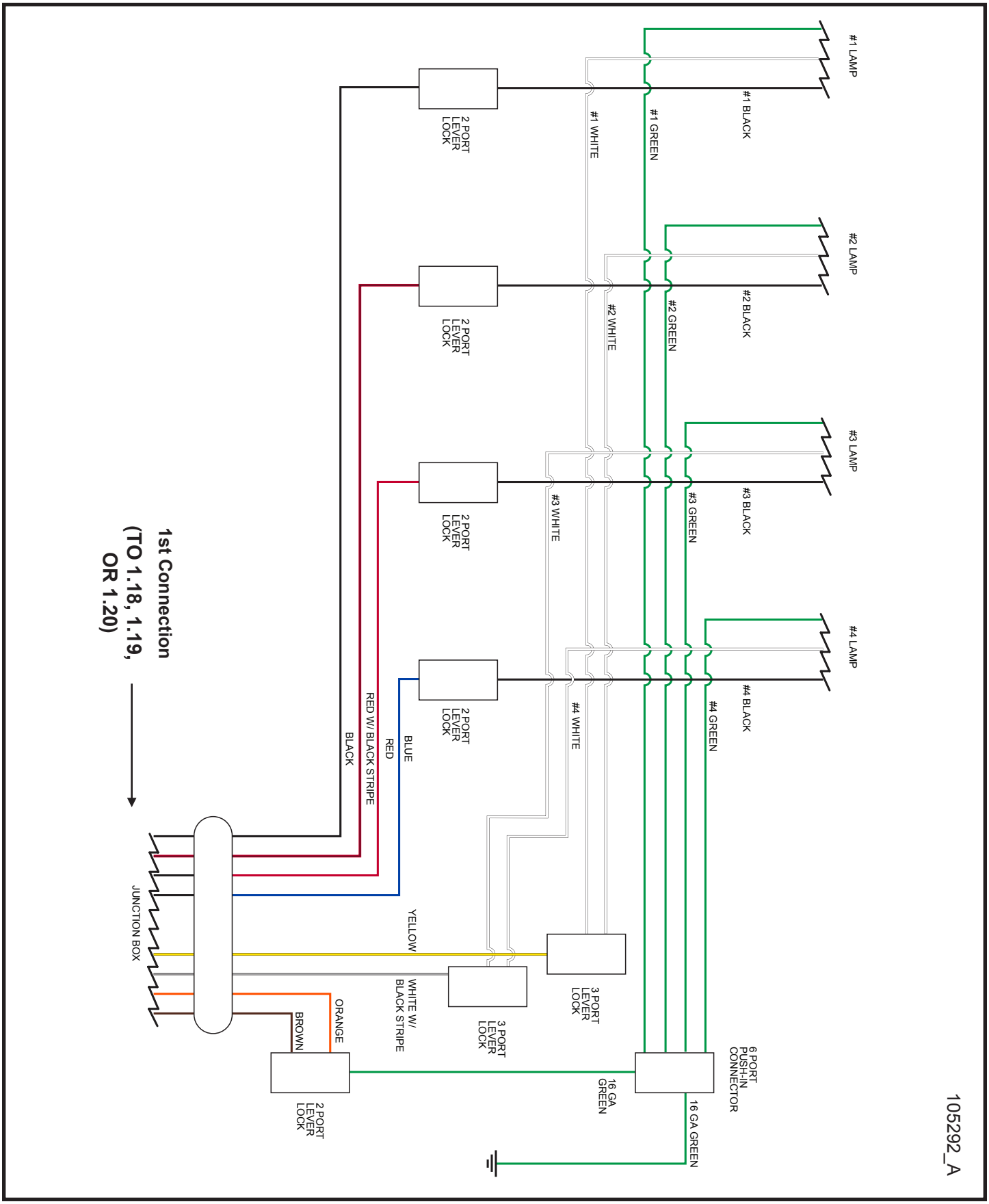

©2016 Allmand™ Bros., Inc.

1.15 - 4 Light LED Schematic

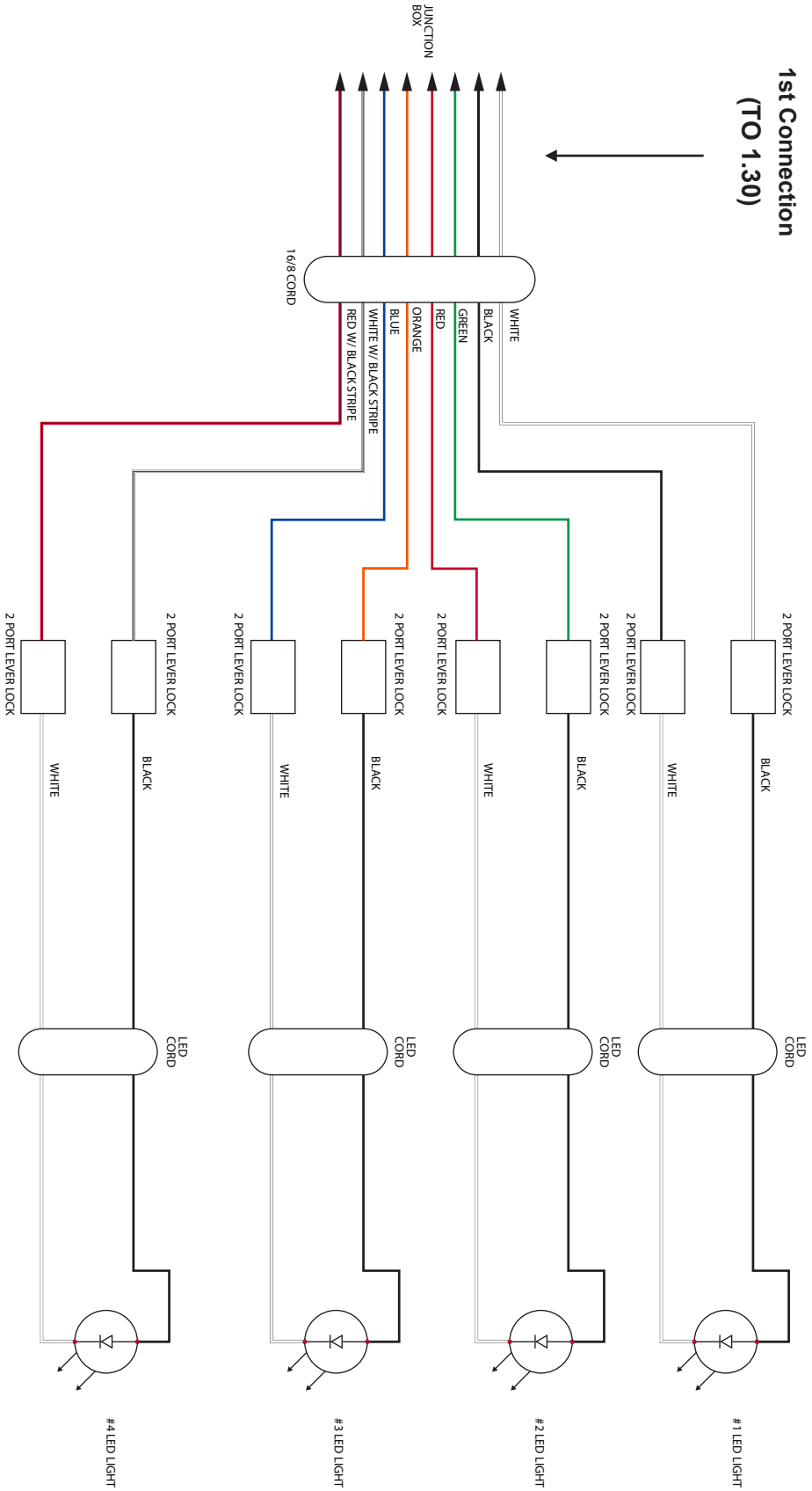

105713_A

©2016 Allmand™ Bros., Inc.

1.16 - 4 Light LED Disconnect Schematic

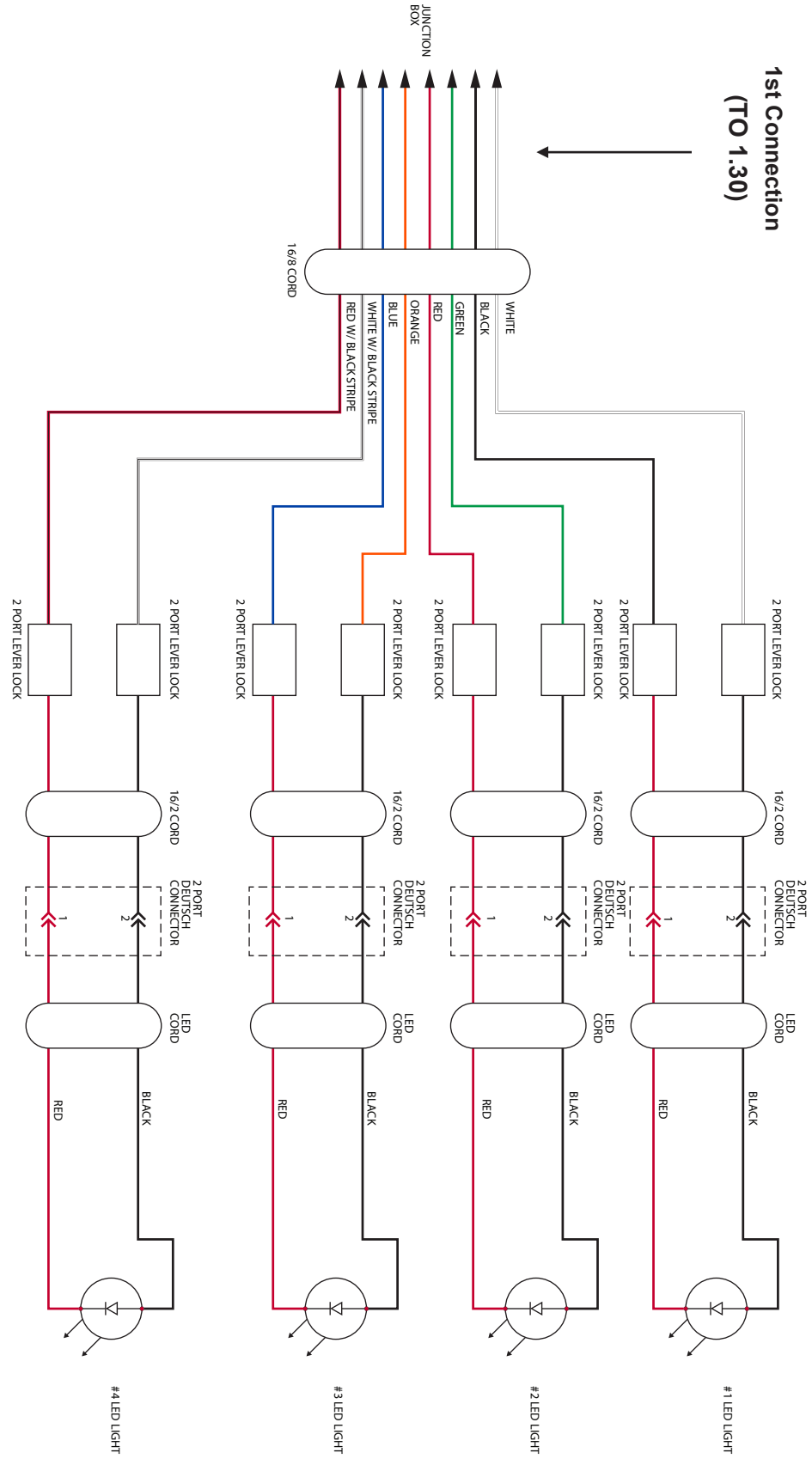

106157_A

©2016 Allmand™ Bros., Inc.

1.17 - 4 Light Relay Schematic

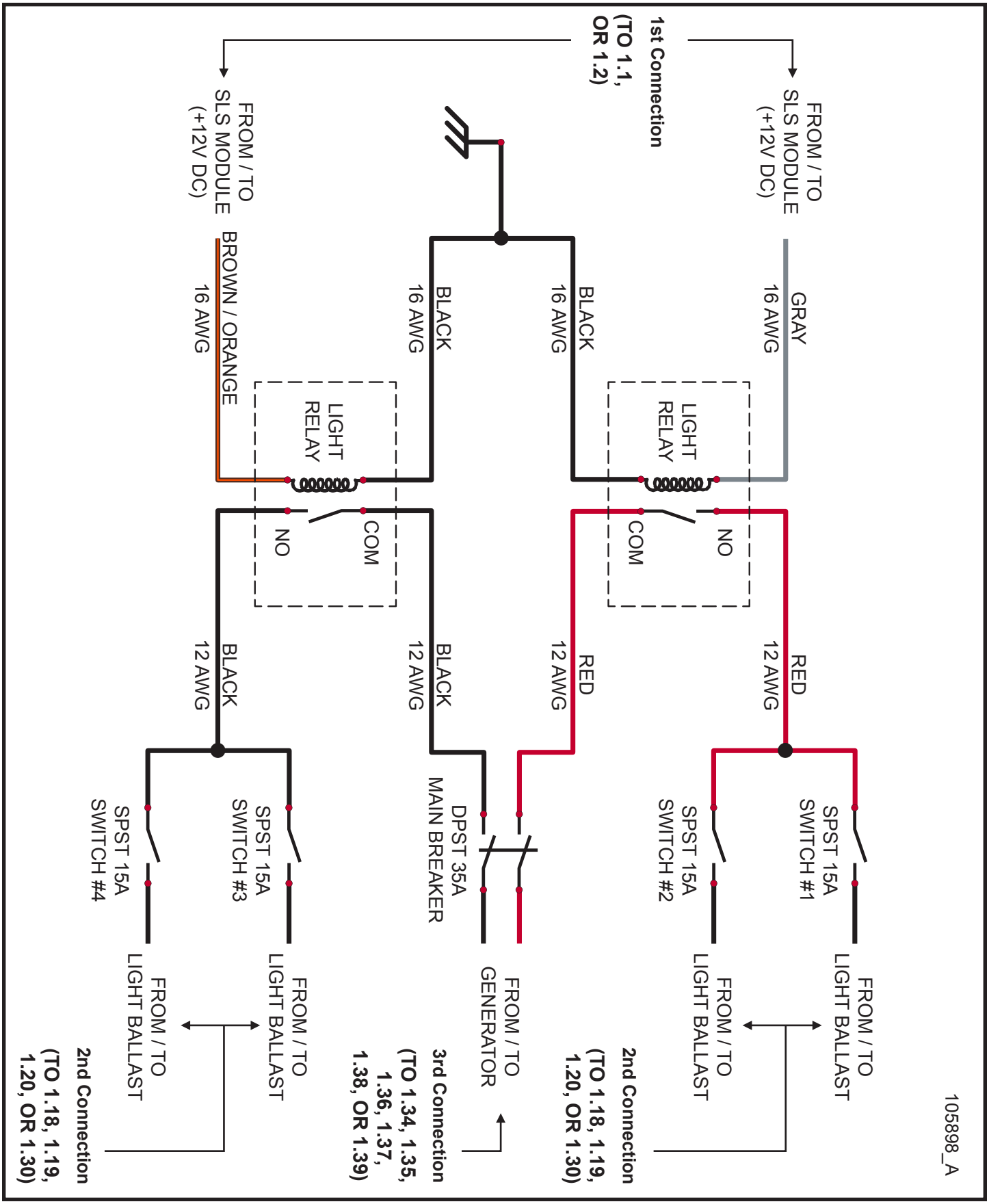

©2016 Allmand™ Bros., Inc.

1.18 - 1000W 60Hz 120V Ballast Schematic

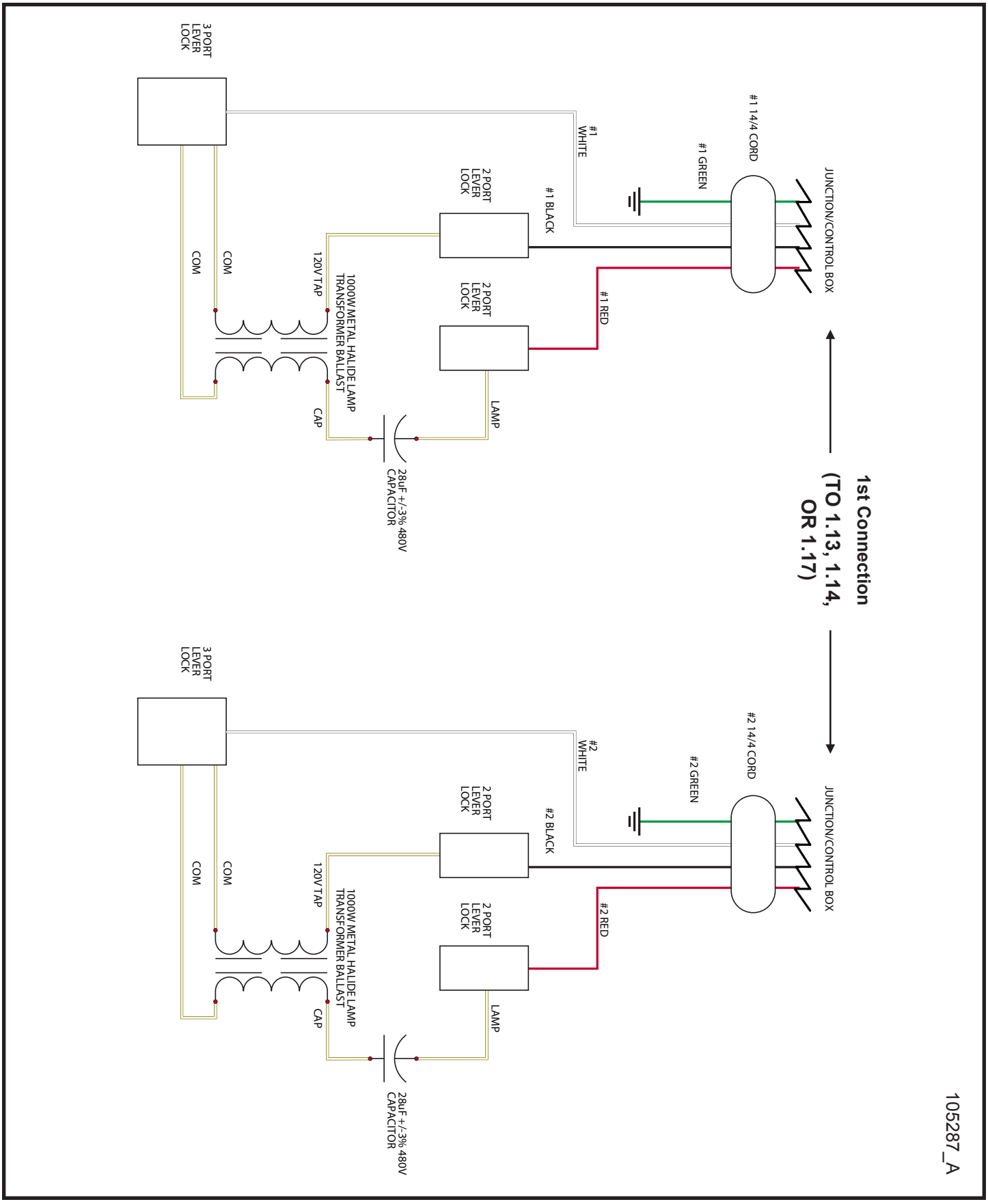

©2016 Allmand™ Bros., Inc.

1.19 - 1000W 50Hz 120V Ballast Schematic

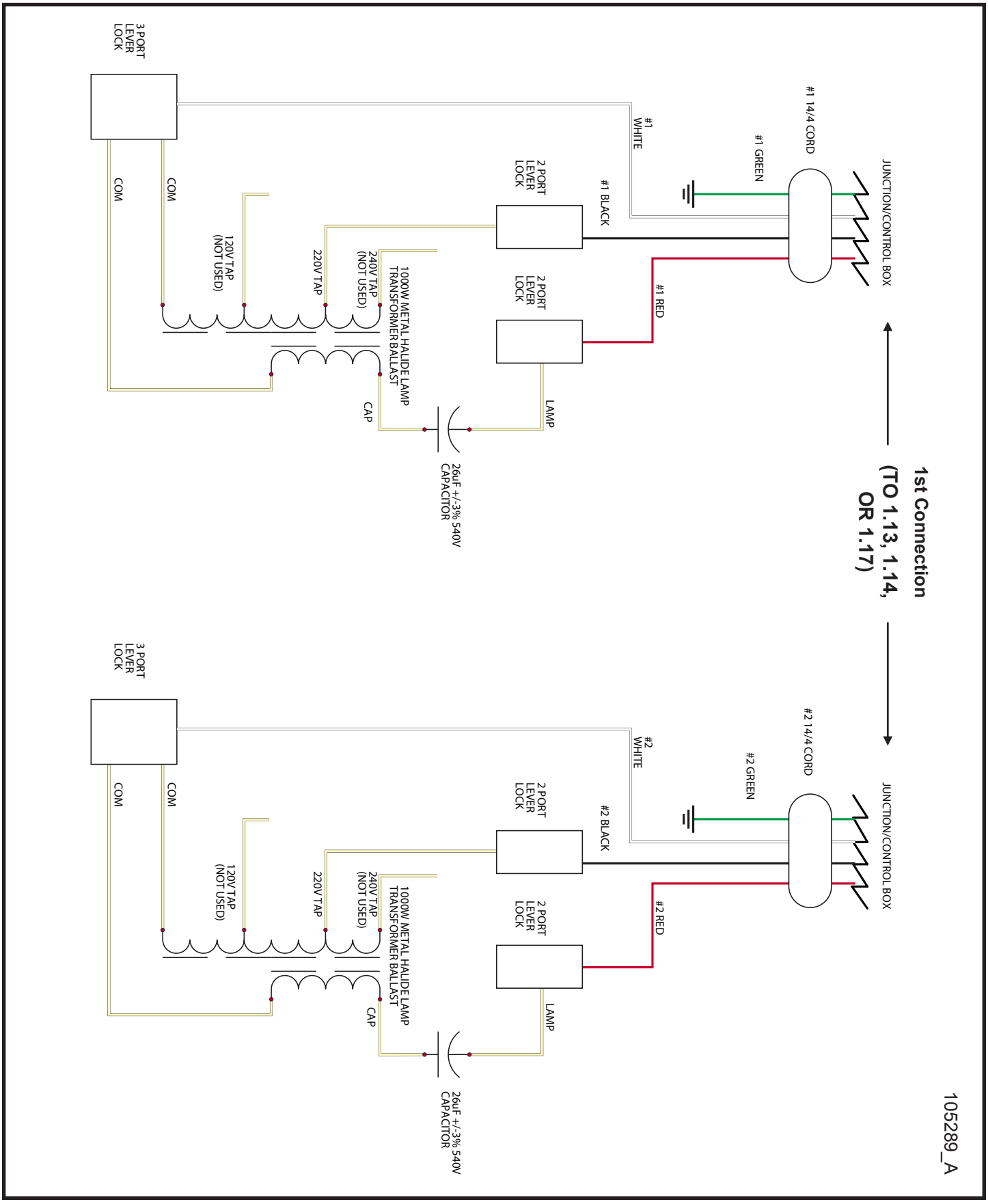

©2016 Allmand™ Bros., Inc.

1.20 - 1250W 60Hz 120V Ballast Schematic

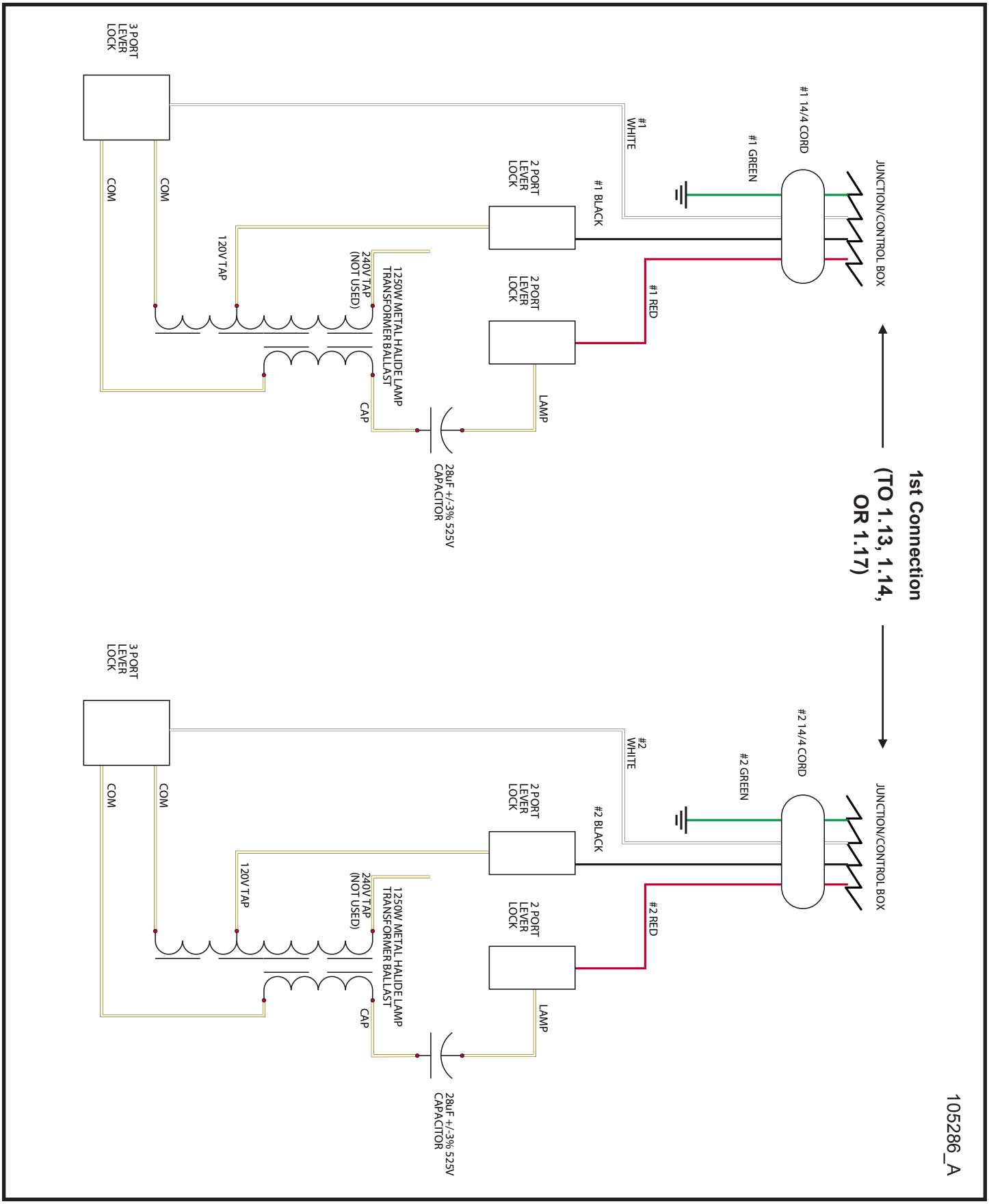

©2016 Allmand™ Bros., Inc.

1.21 - Up/Down Momentary Switch Schematic

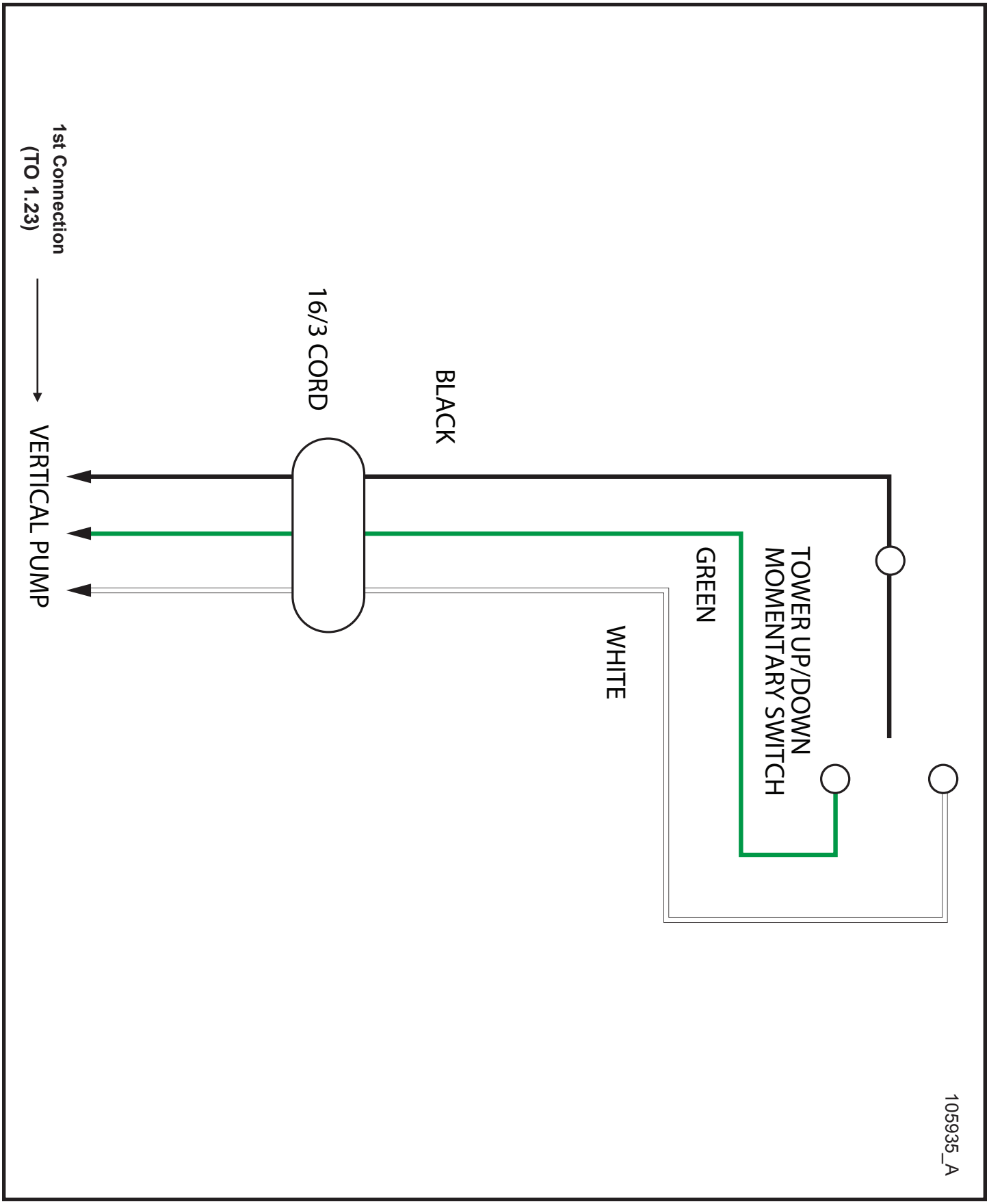

©2016 Allmand™ Bros., Inc.

1.22 - Up/Down Momentary Switch w/Alarm Schematic

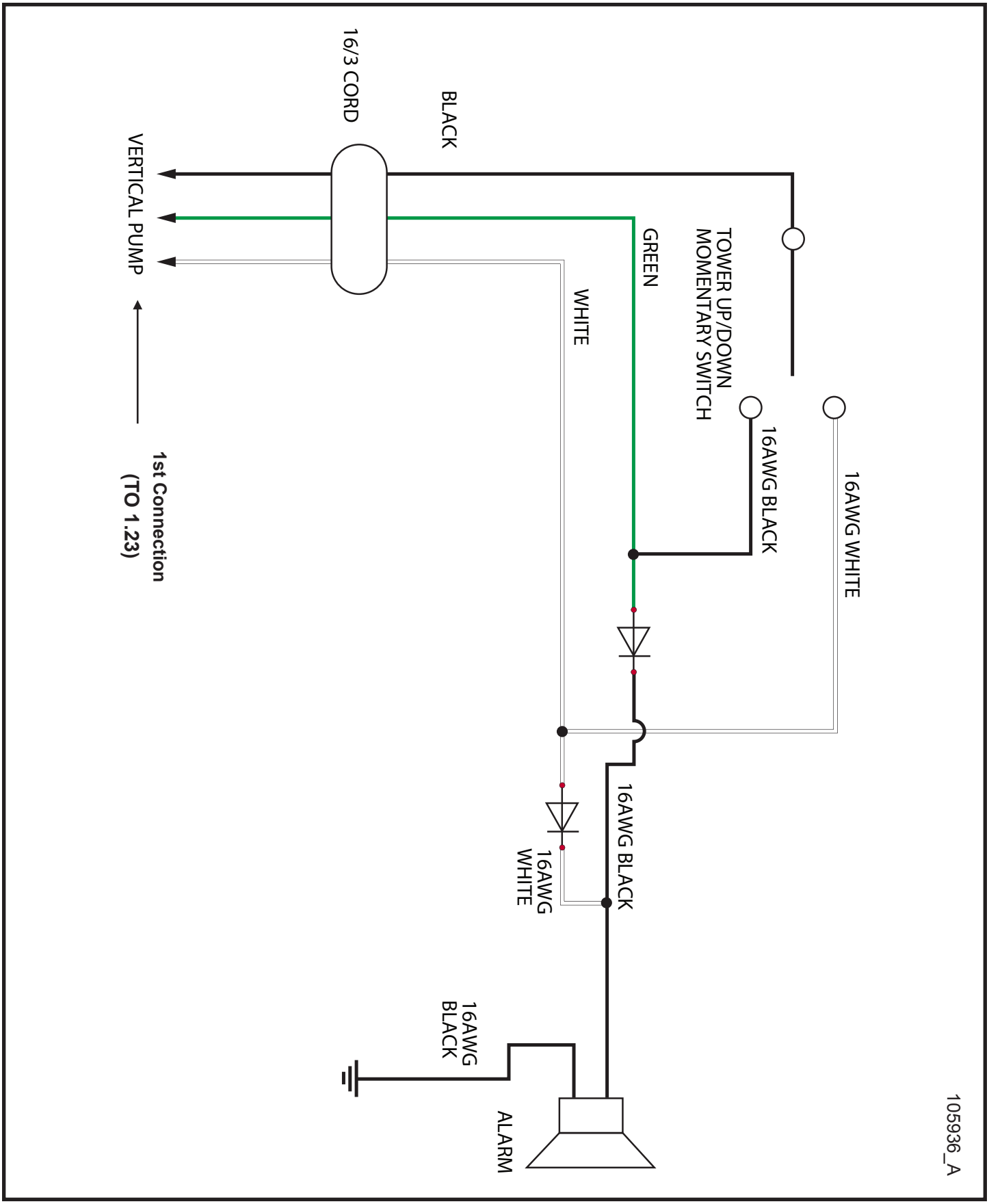

©2016 Allmand™ Bros., Inc.

1.23 - Push Switch Schematic

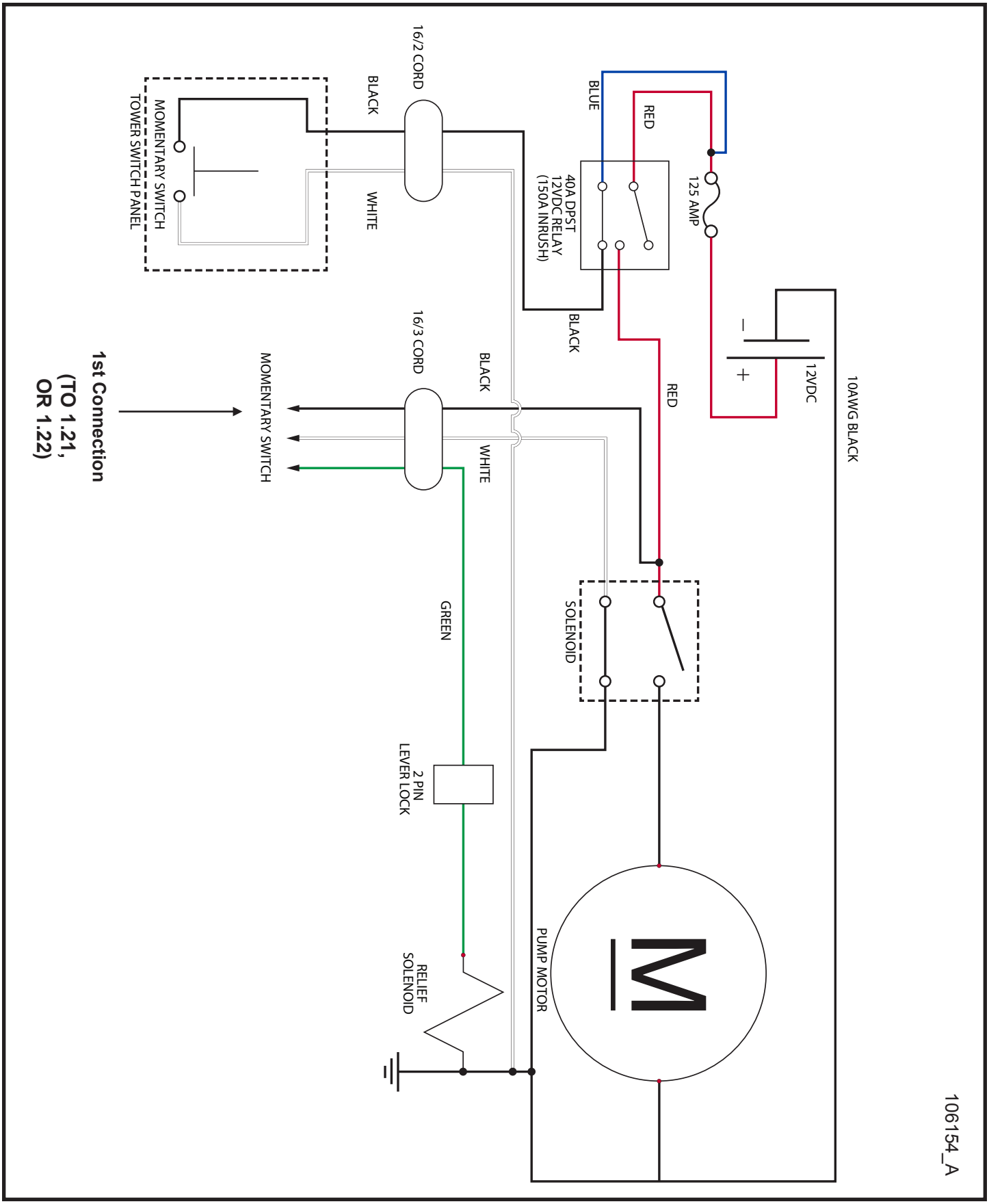

©2016 Allmand™ Bros., Inc.

1.24 - Int'l Generator to Light Schematic

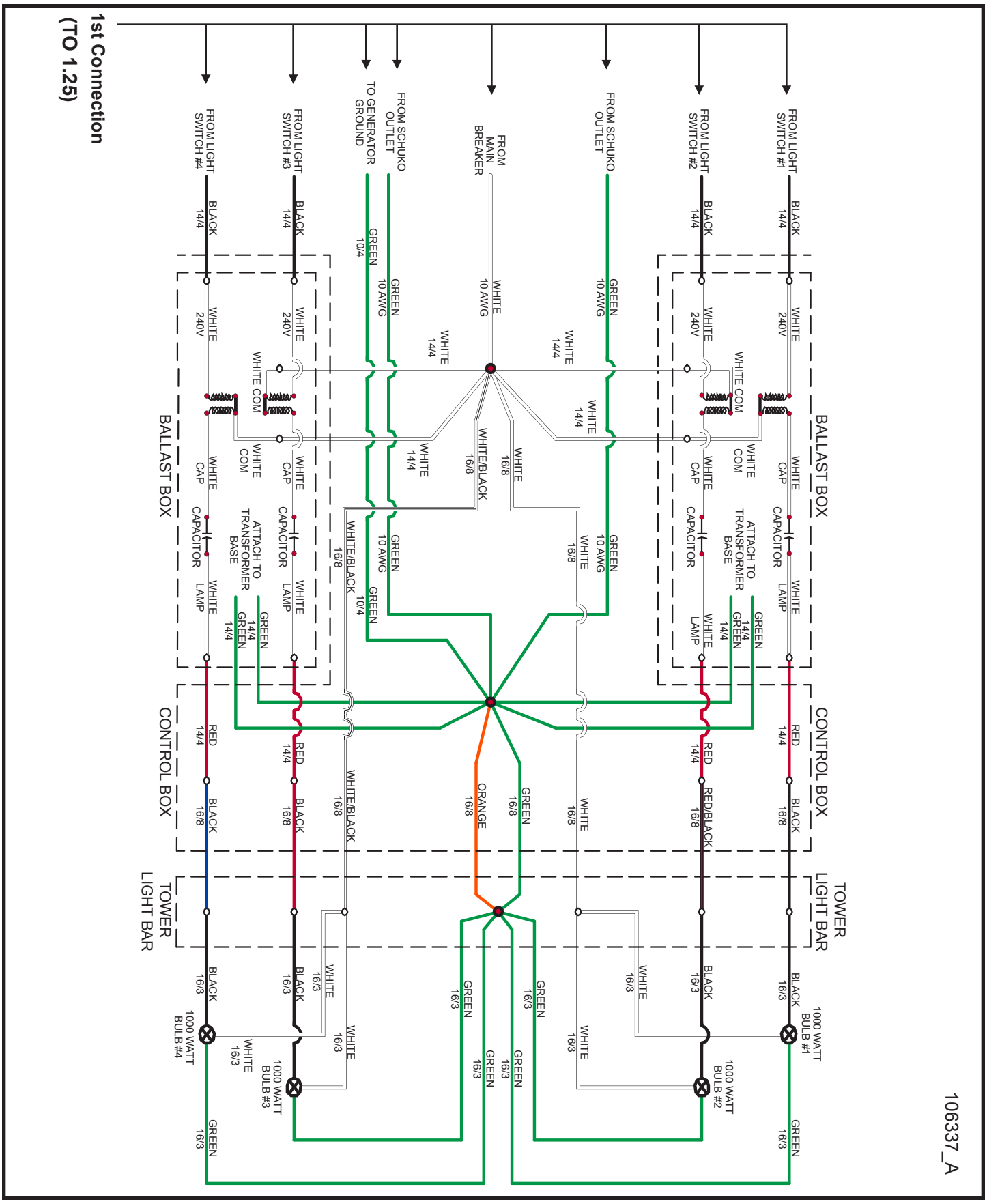

©2016 Allmand™ Bros., Inc.

1.25 - Int'l Schuko Panel Schematic

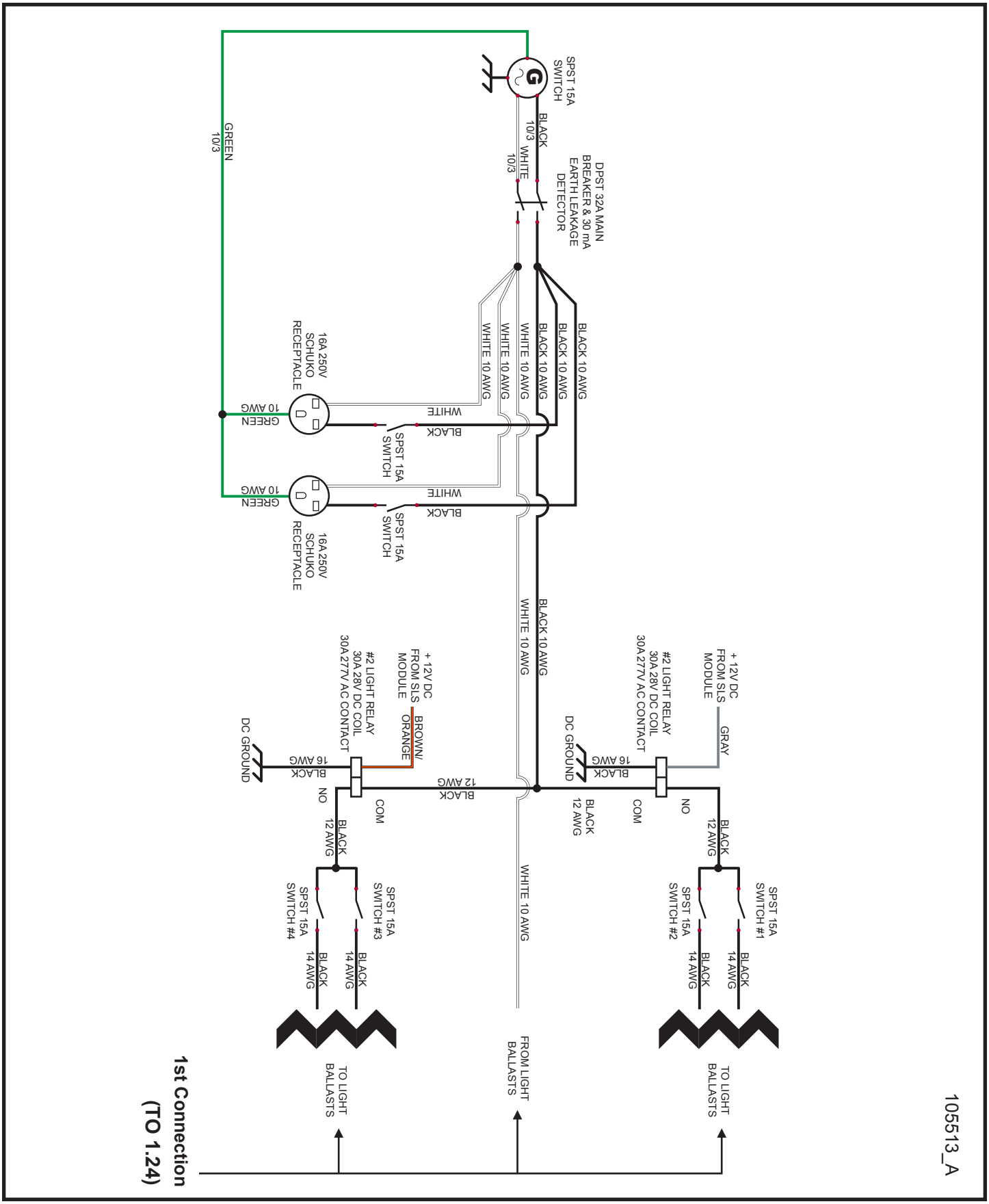

©2016 Allmand™ Bros., Inc.

1.26 - Int'l Tail Light Schematic (1 of 2)

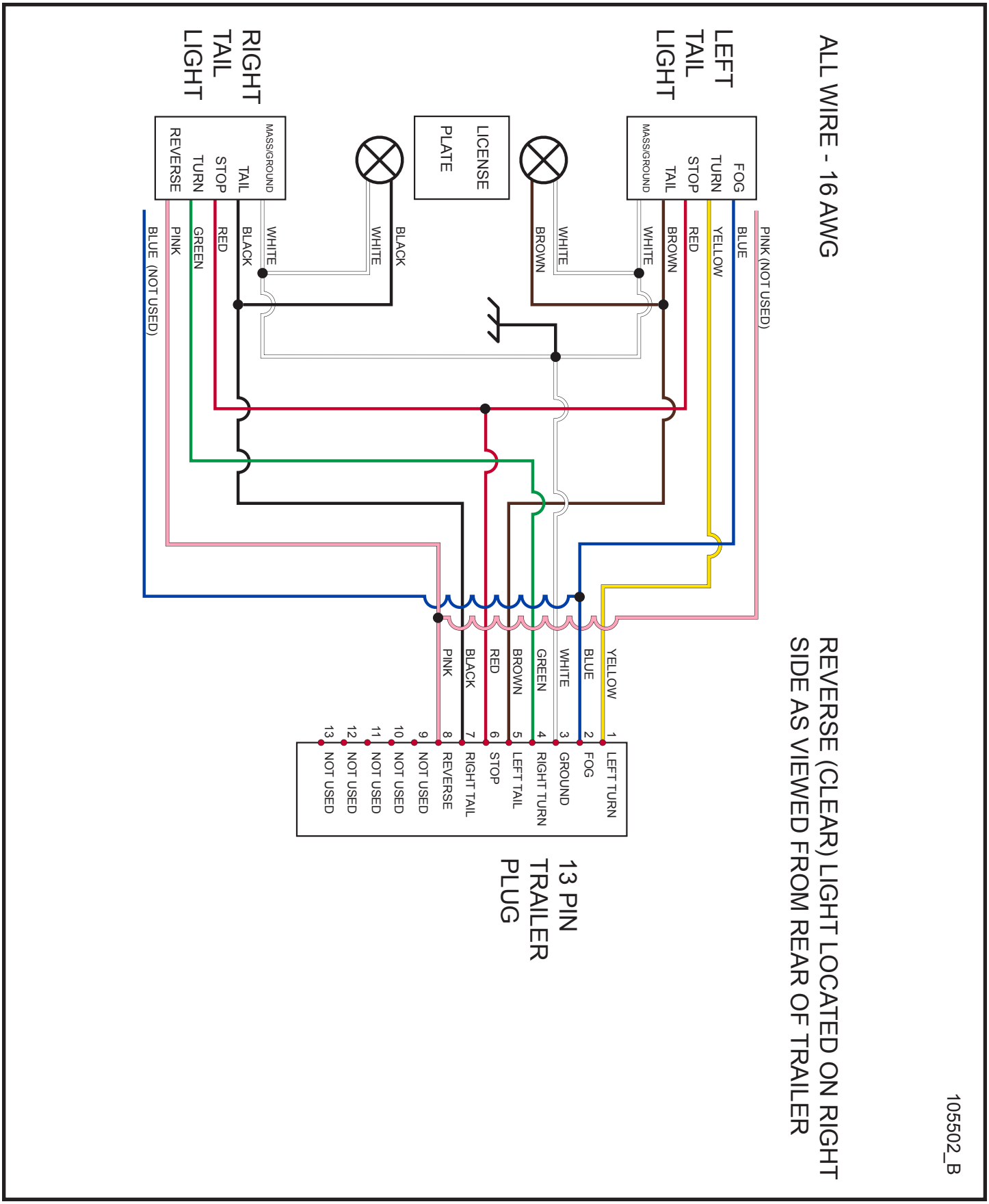

©2016 Allmand™ Bros., Inc.

1.26 - Int'l Tail Light Schematic (2 of 2)

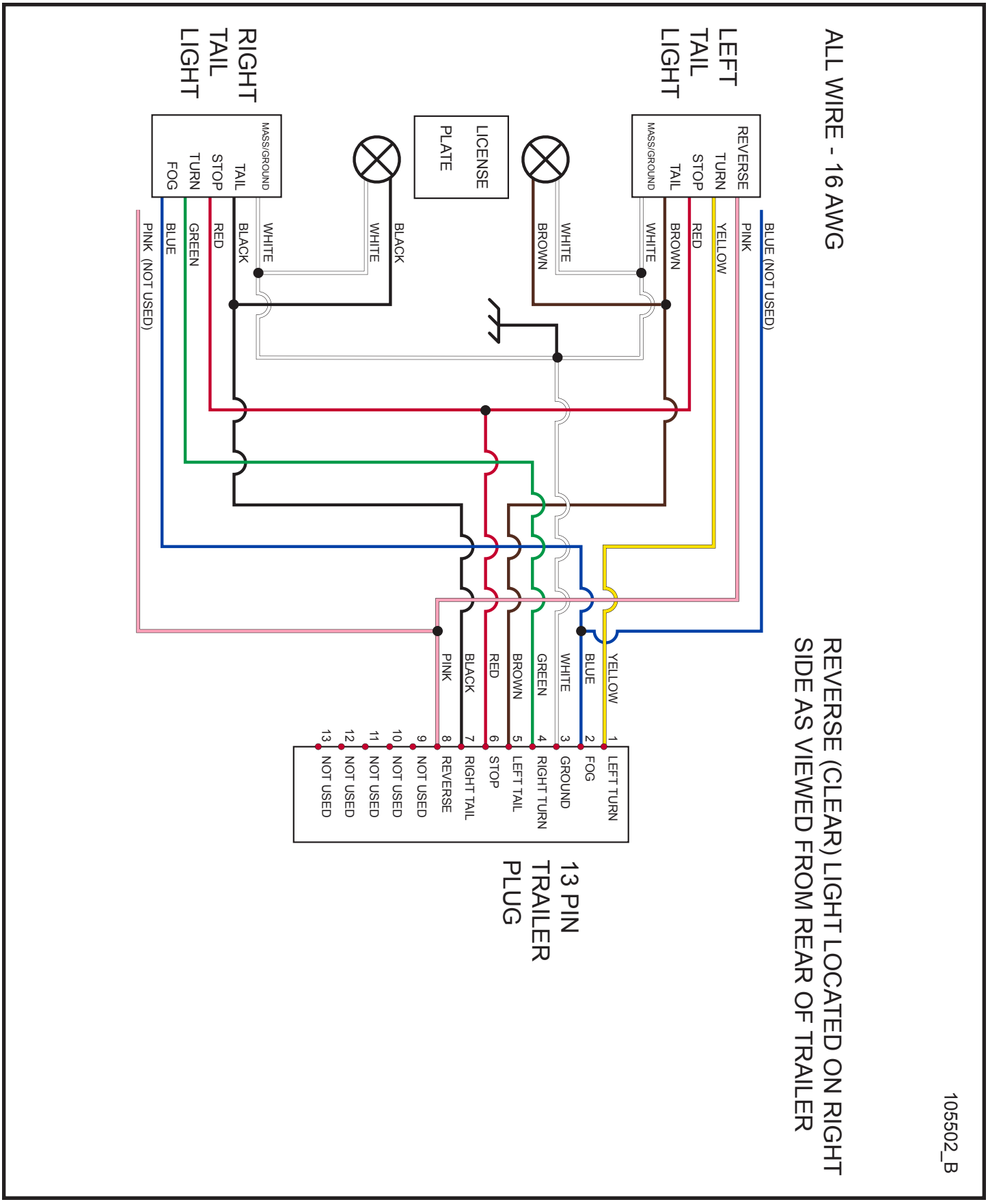

©2016 Allmand™ Bros., Inc.

1.27 - Tail Light Schematic

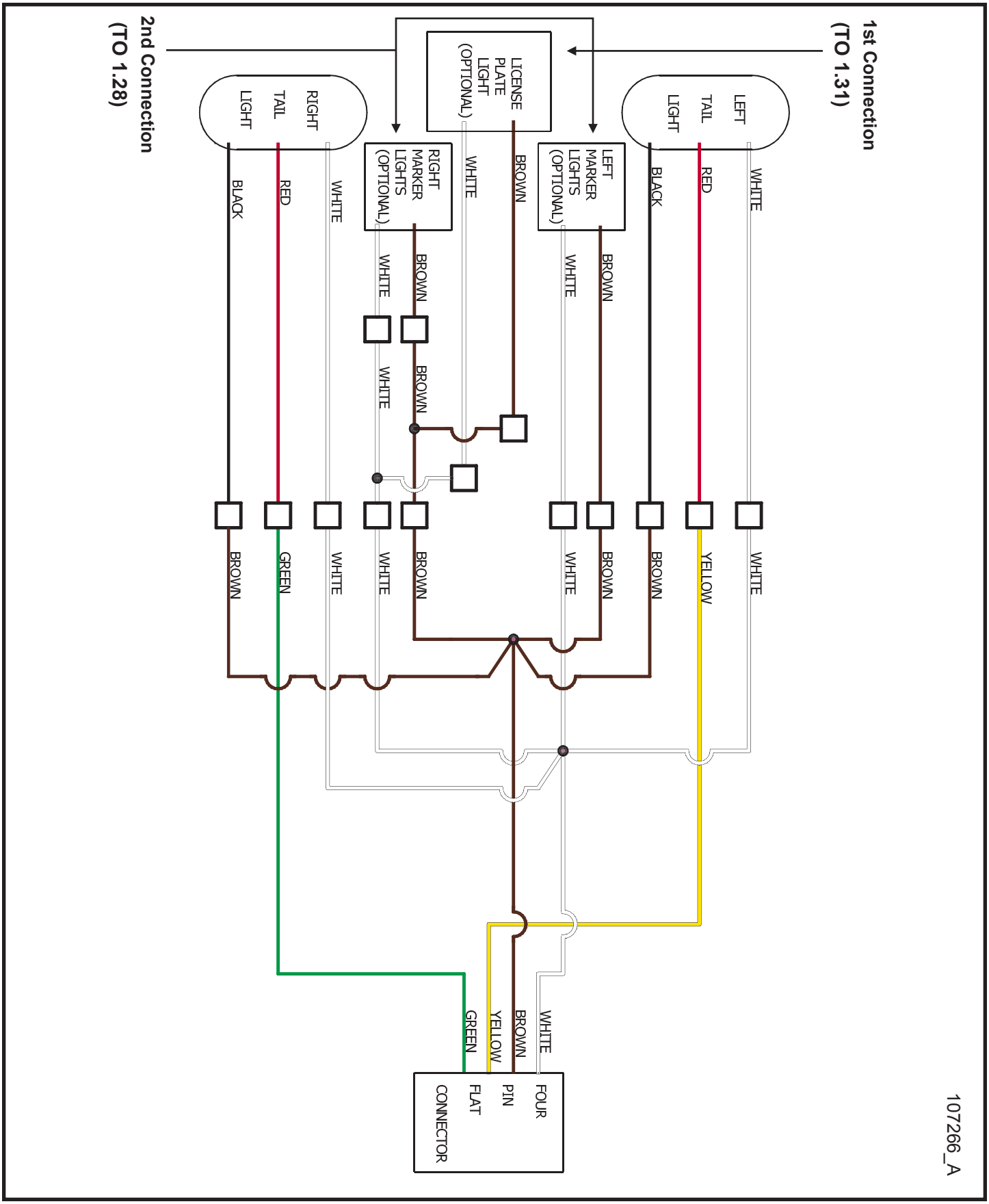

©2016 Allmand™ Bros., Inc.

1.28 - Marker Lights Schematic

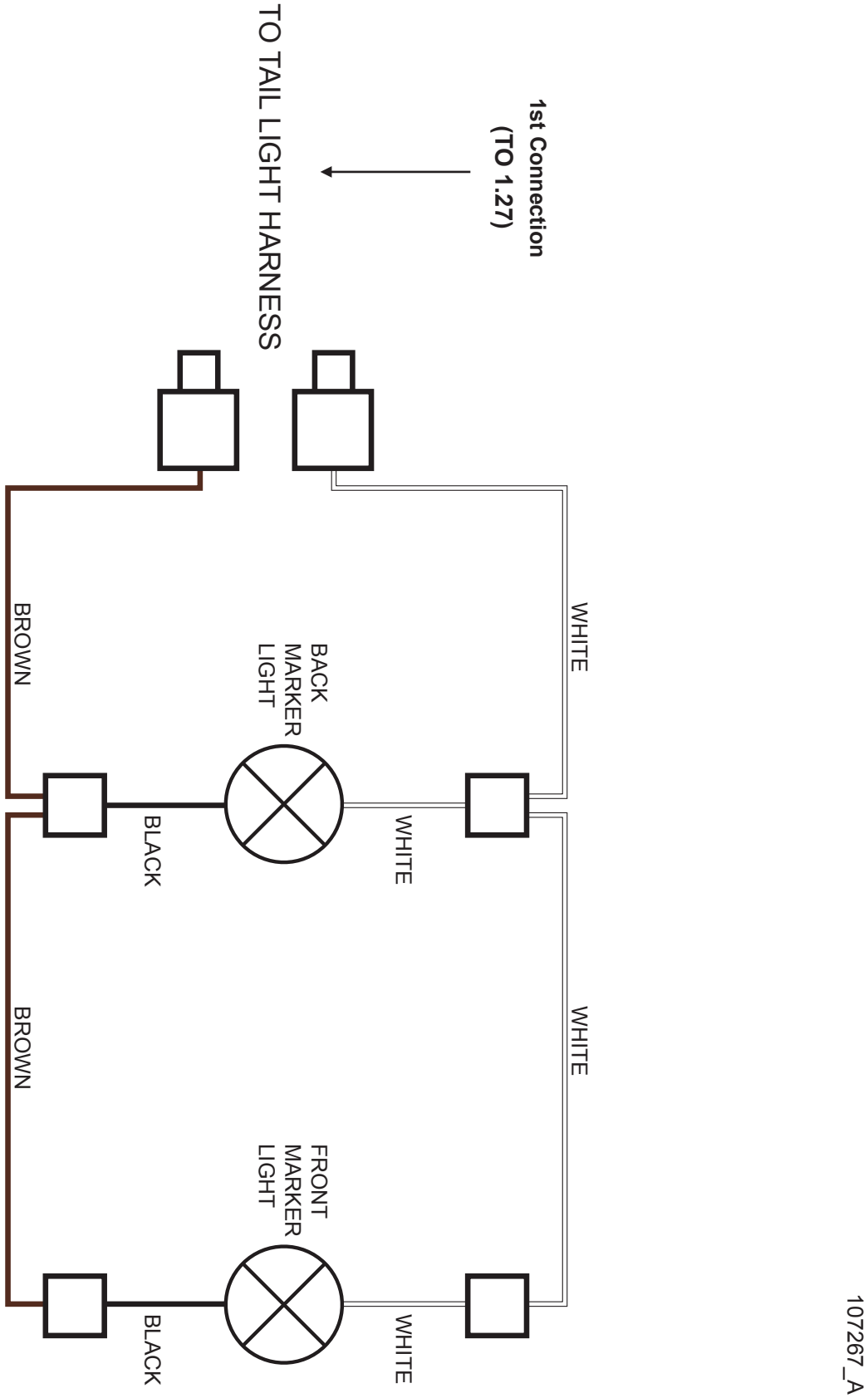

©2016 Allmand™ Bros., Inc.

1.29 - Interior Work Light Schematic

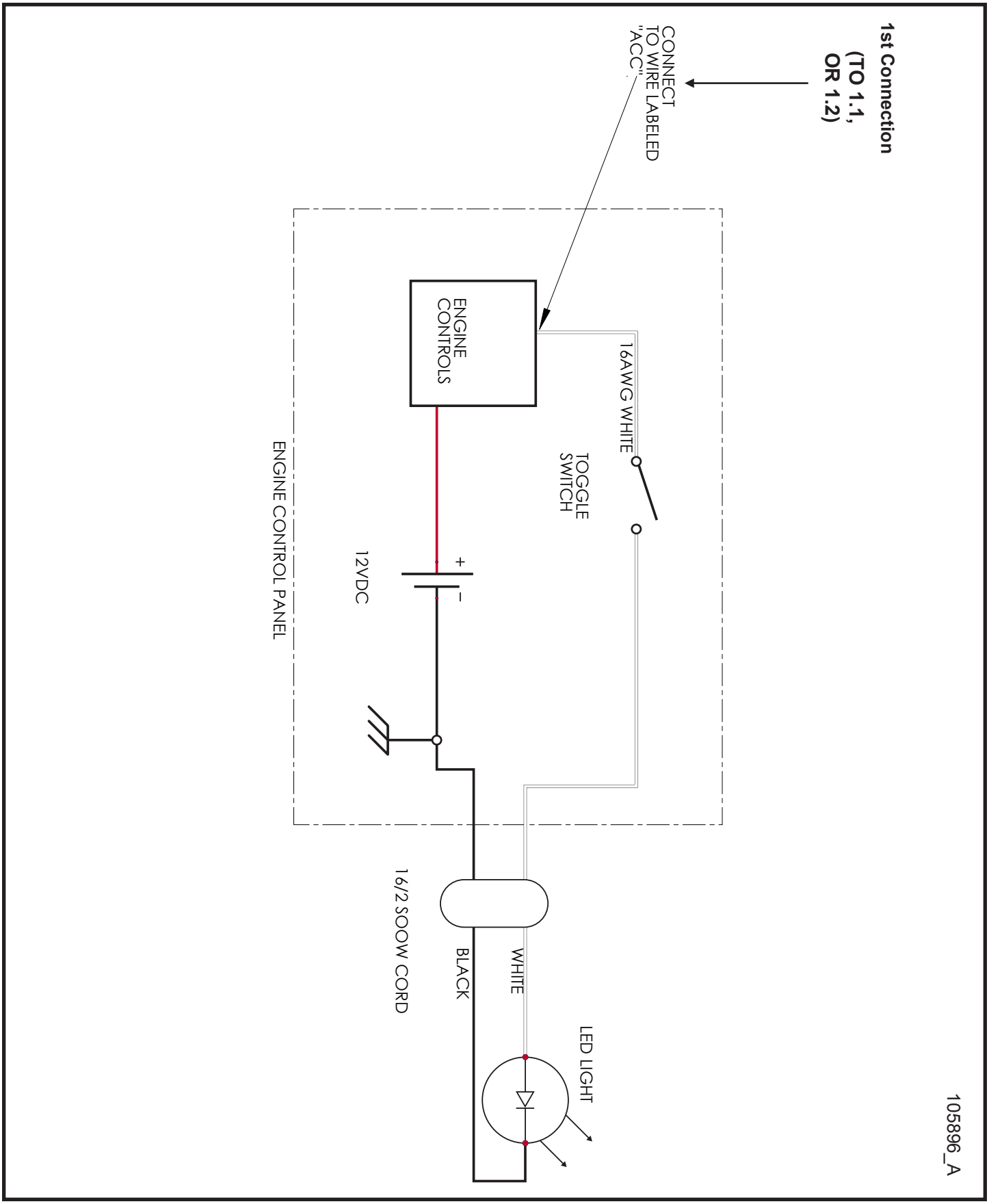

©2016 Allmand™ Bros., Inc.

1.30 - LED Driver 4 Light Schematic

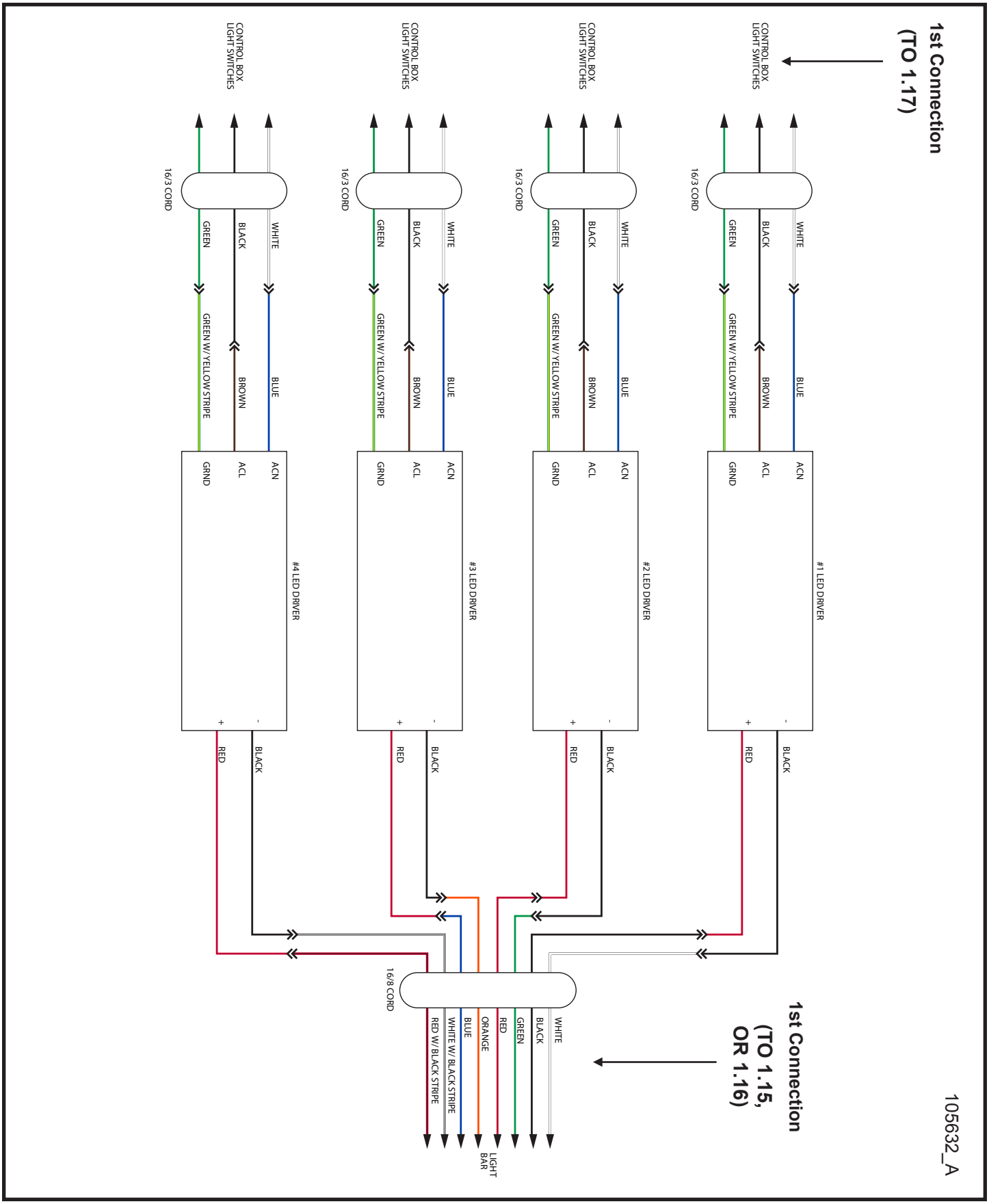

©2016 Allmand™ Bros., Inc.

1.31 - License Plate LED Lamp Schematic

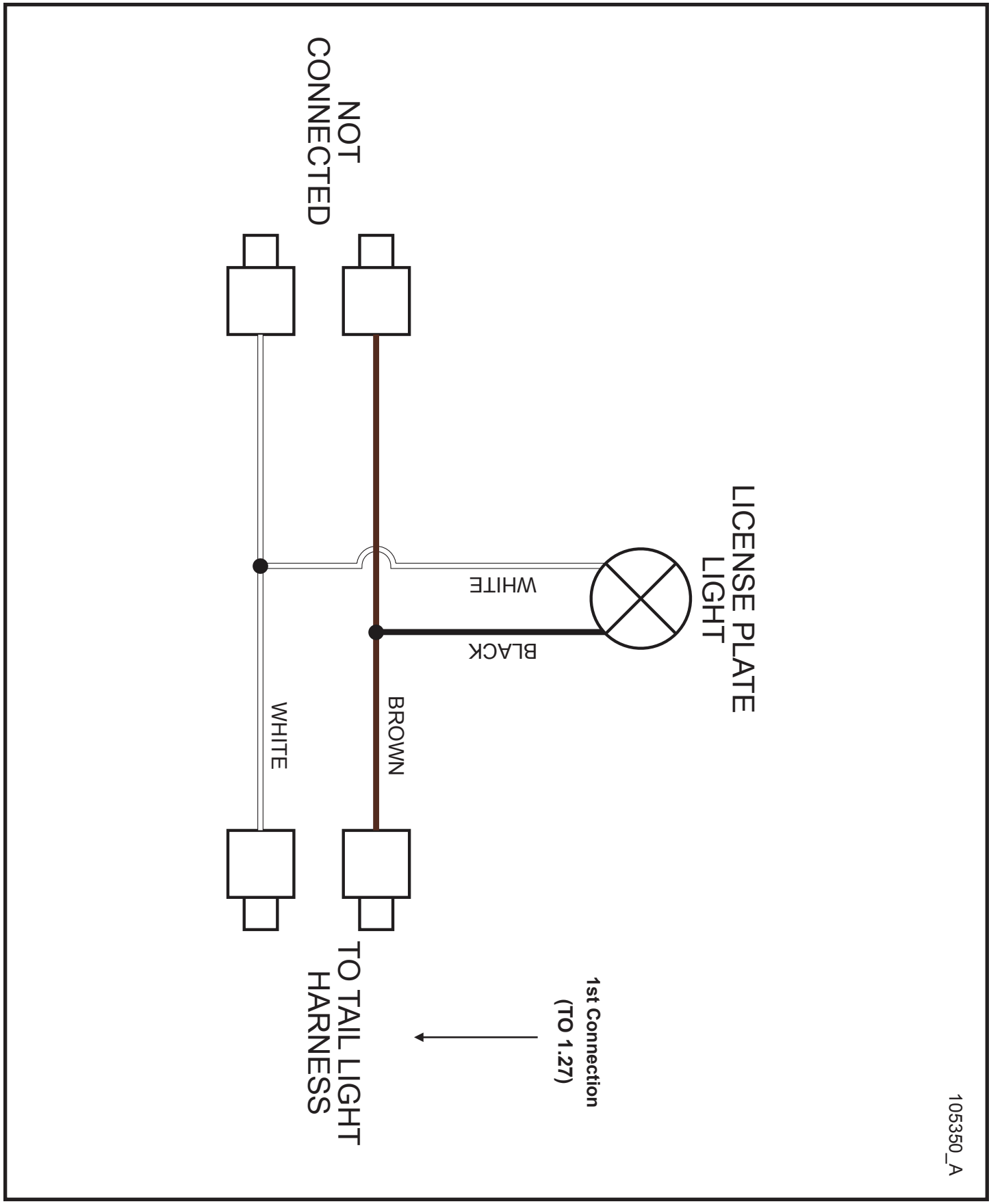

©2016 Allmand™ Bros., Inc.

1.32 - SLS 1.1 Relay Addition Schematic

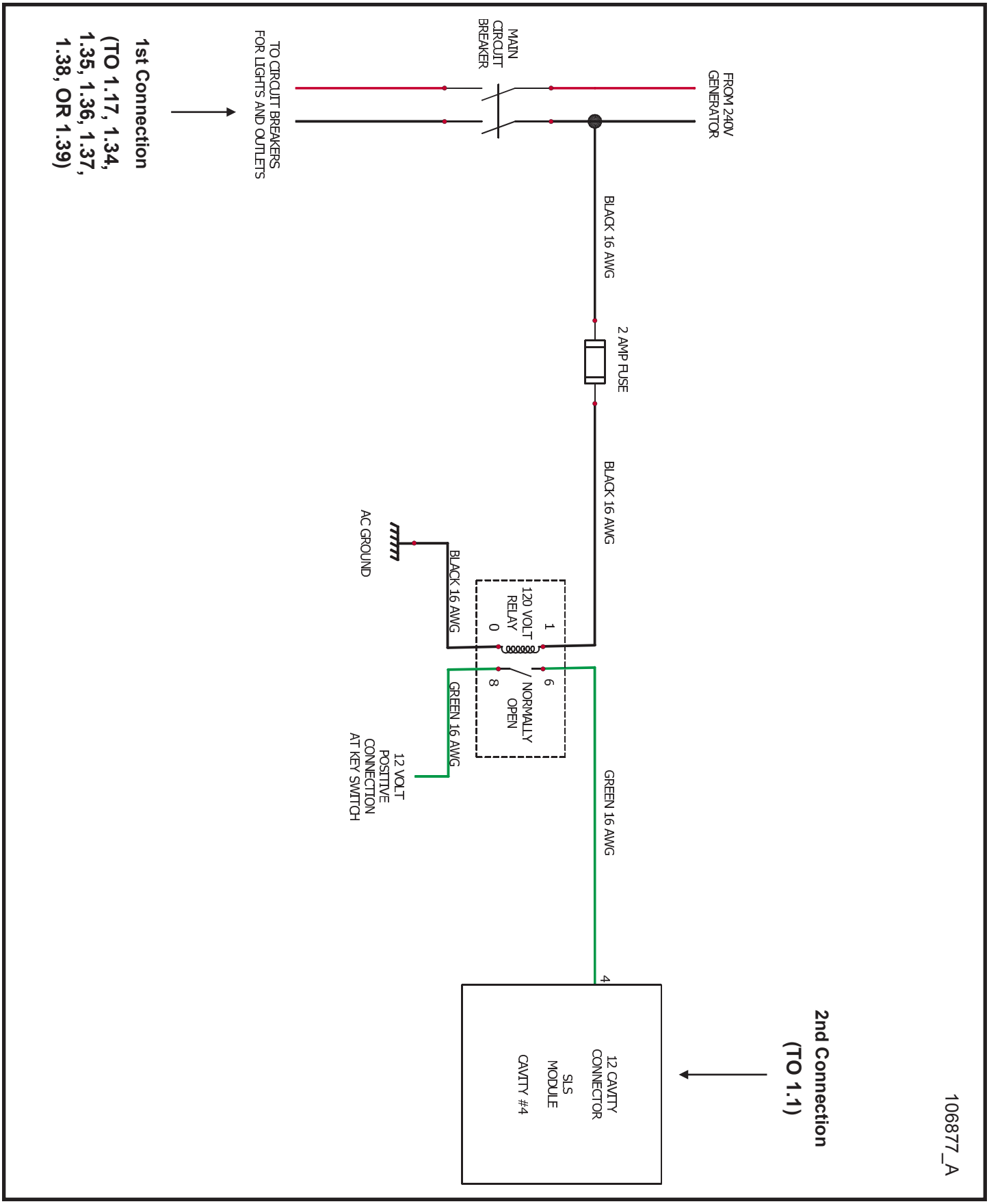

©2016 Allmand™ Bros., Inc.

1.33 - LSC 2.1 120V Transformer Schematic

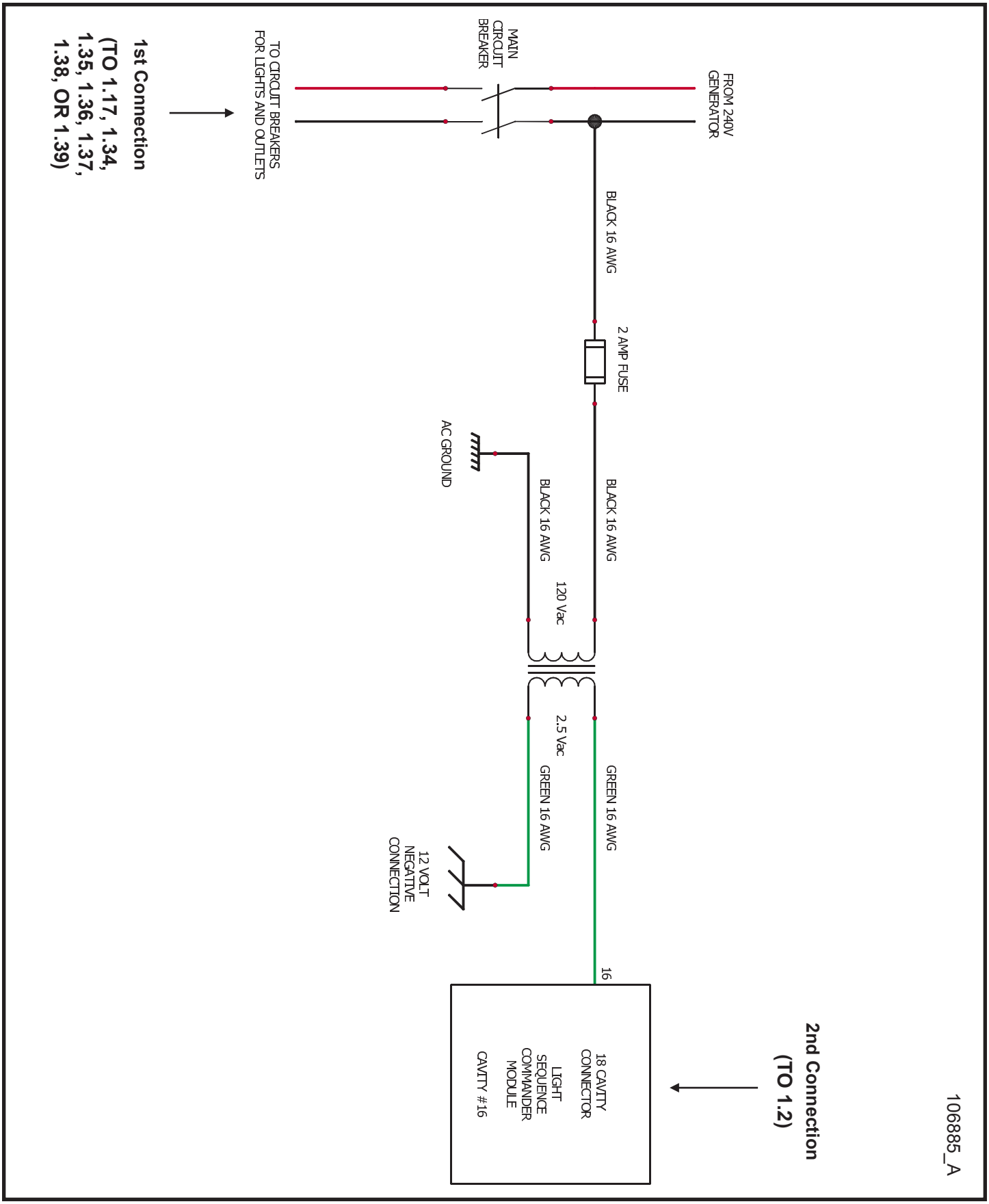

©2016 Allmand™ Bros., Inc.

1.34 - 2-20AMP GFCI Schematic

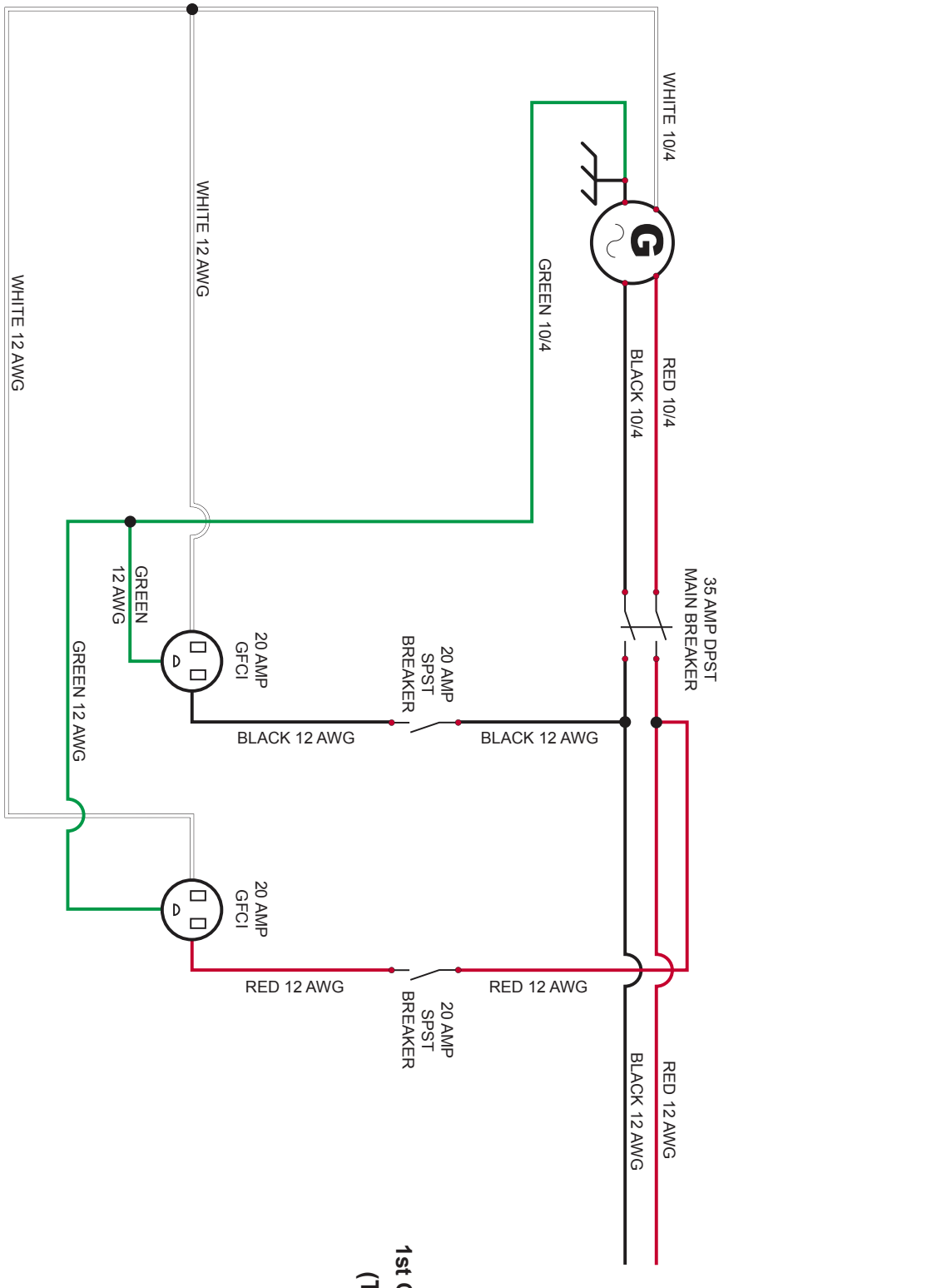

©2016 Allmand™ Bros., Inc.

1.35 - 1-20AMP GFCI Schematic

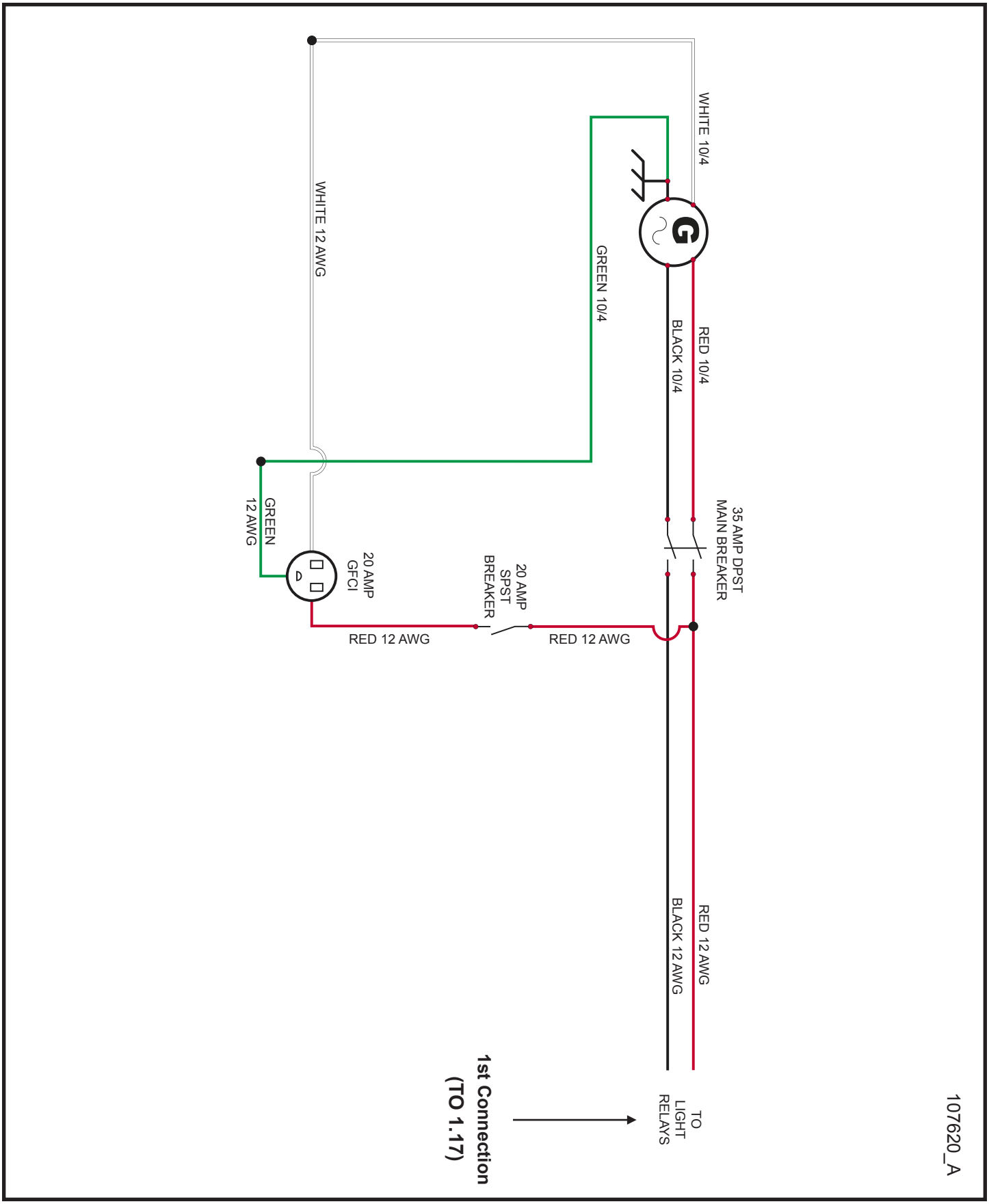

©2016 Allmand™ Bros., Inc.

1.36 - 2-30AMP RV Schematic

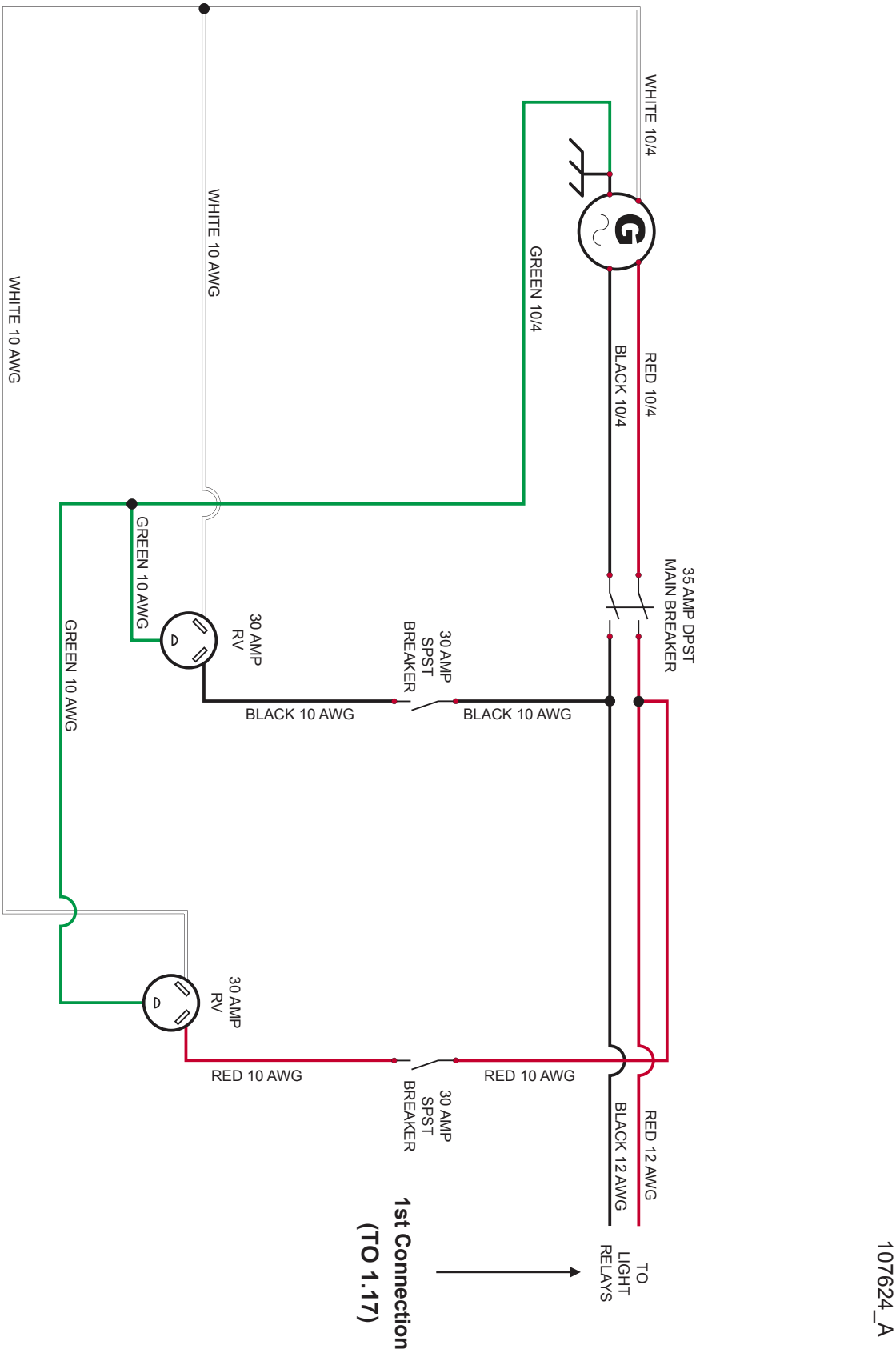

©2016 Allmand™ Bros., Inc.

1.37 - 1-30AMP RV 1-20AMP GFCI Schematic

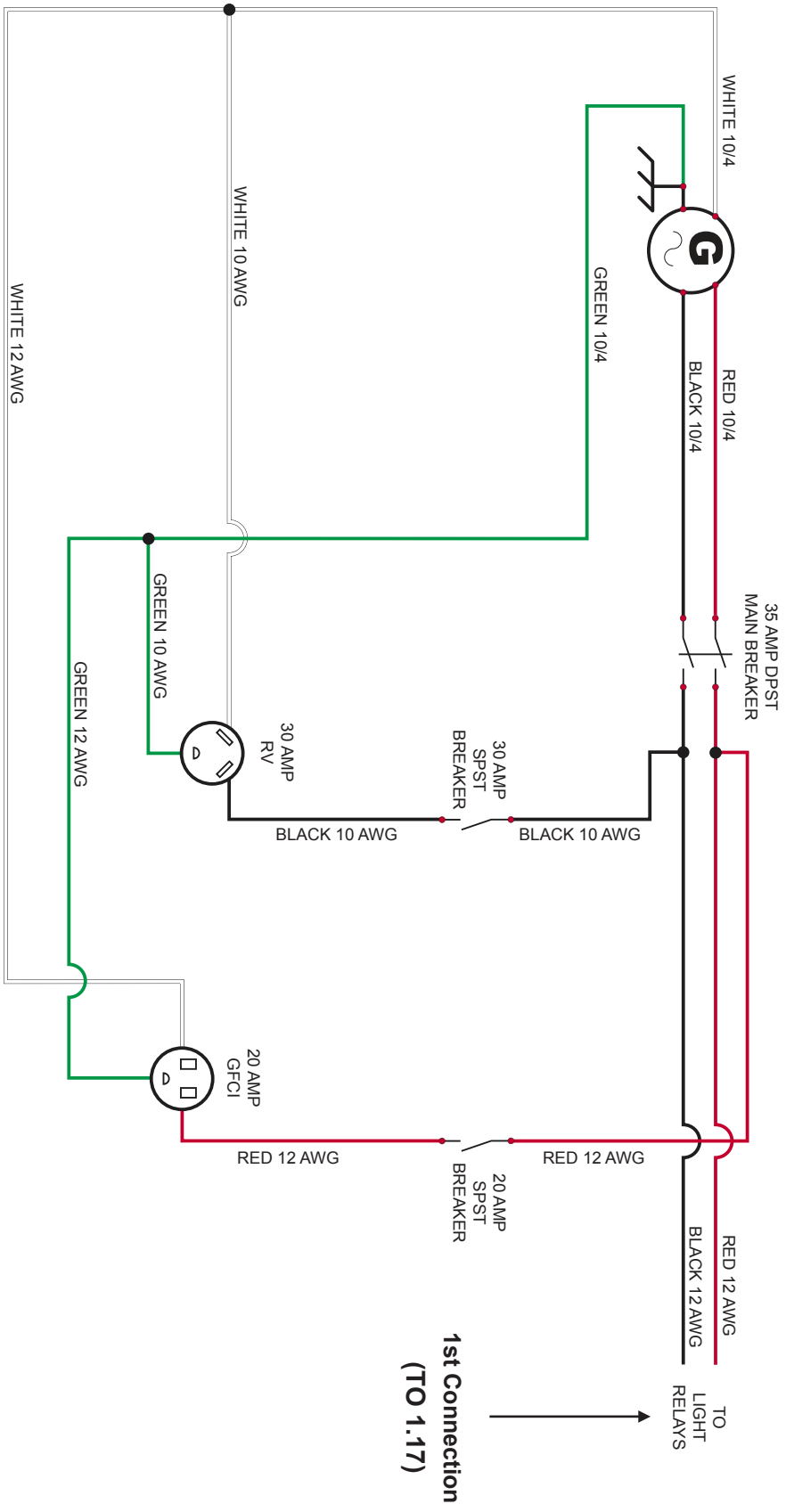

107621_A

©2016 Allmand™ Bros., Inc.

1.38 - 1-30AMP Twistlock 1-20AMP GFCI Schematic

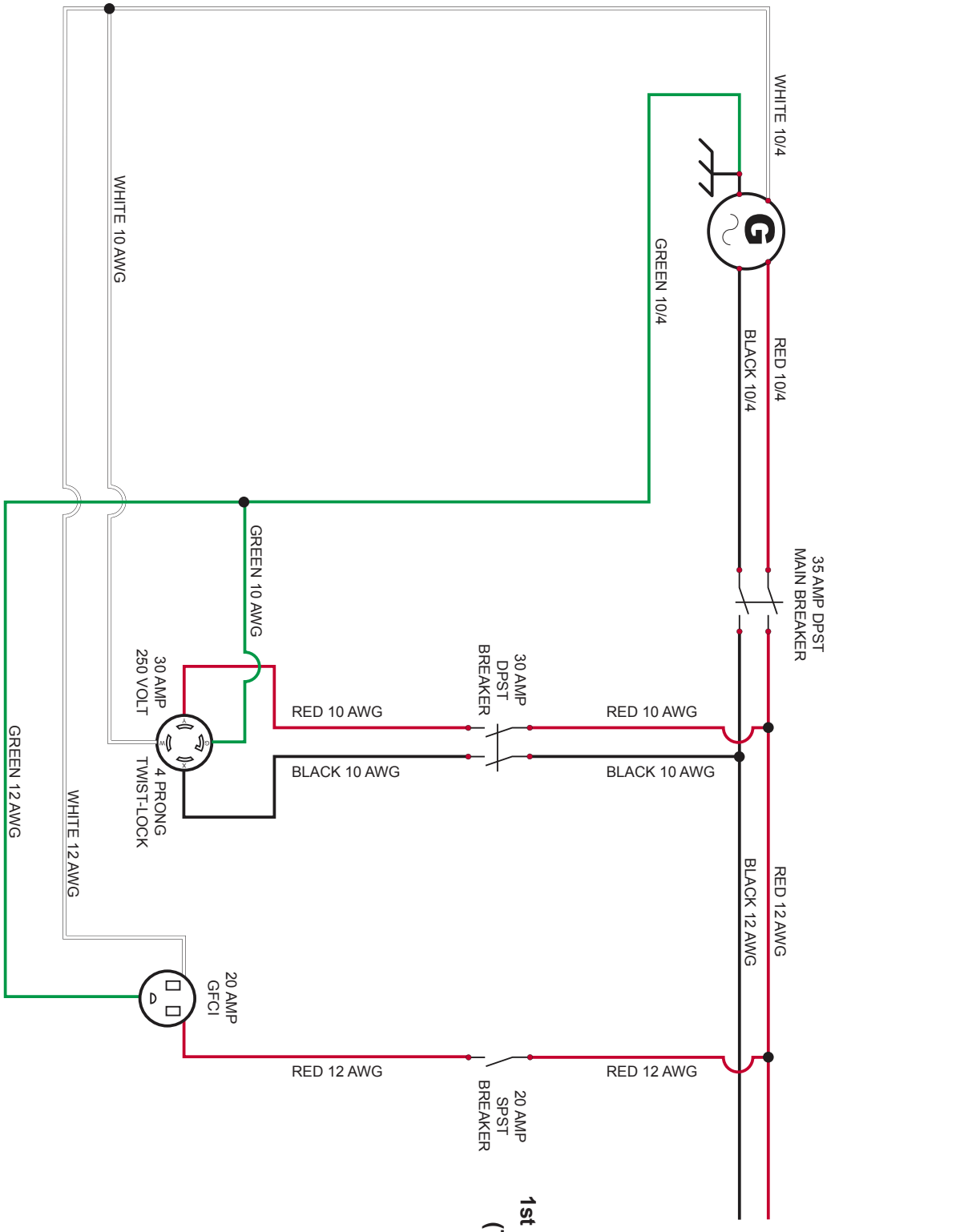

©2016 Allmand™ Bros., Inc.

1.39 - No Outlet Schematic

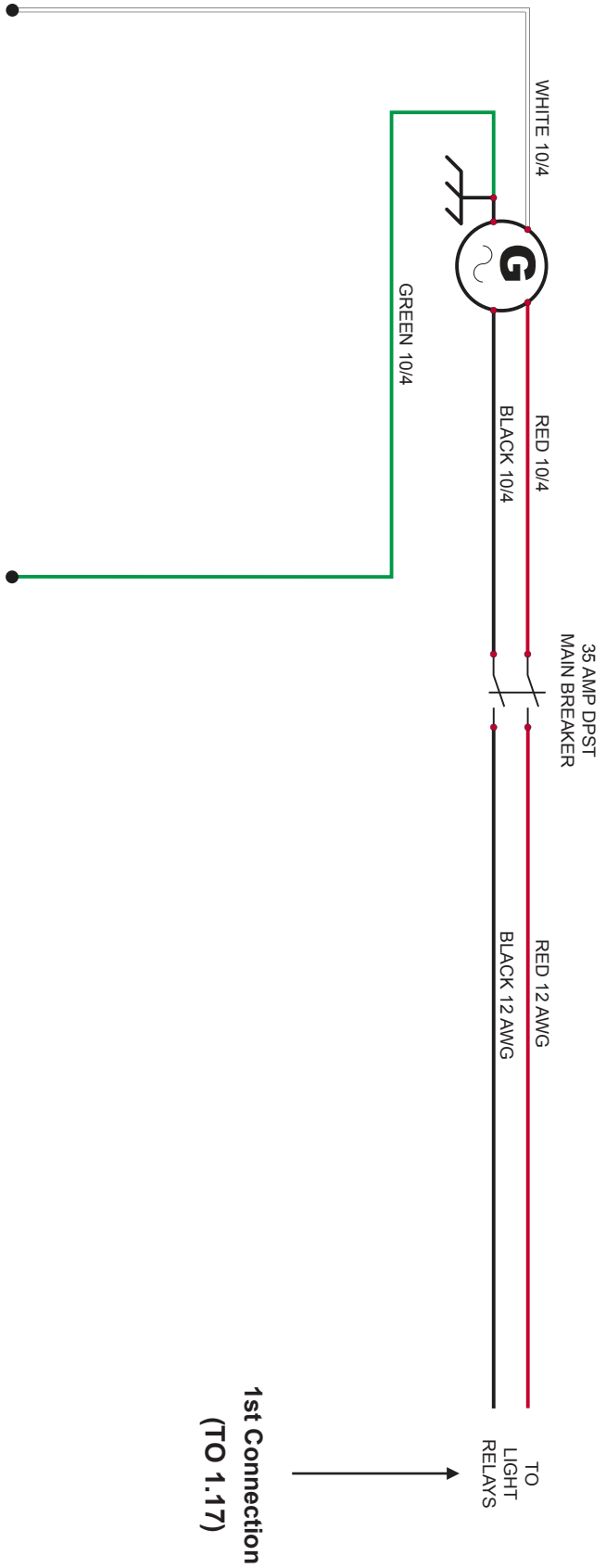

107627_A

©2016 Allmand™ Bros., Inc.

1.40 - GPS ZTR System Schematic

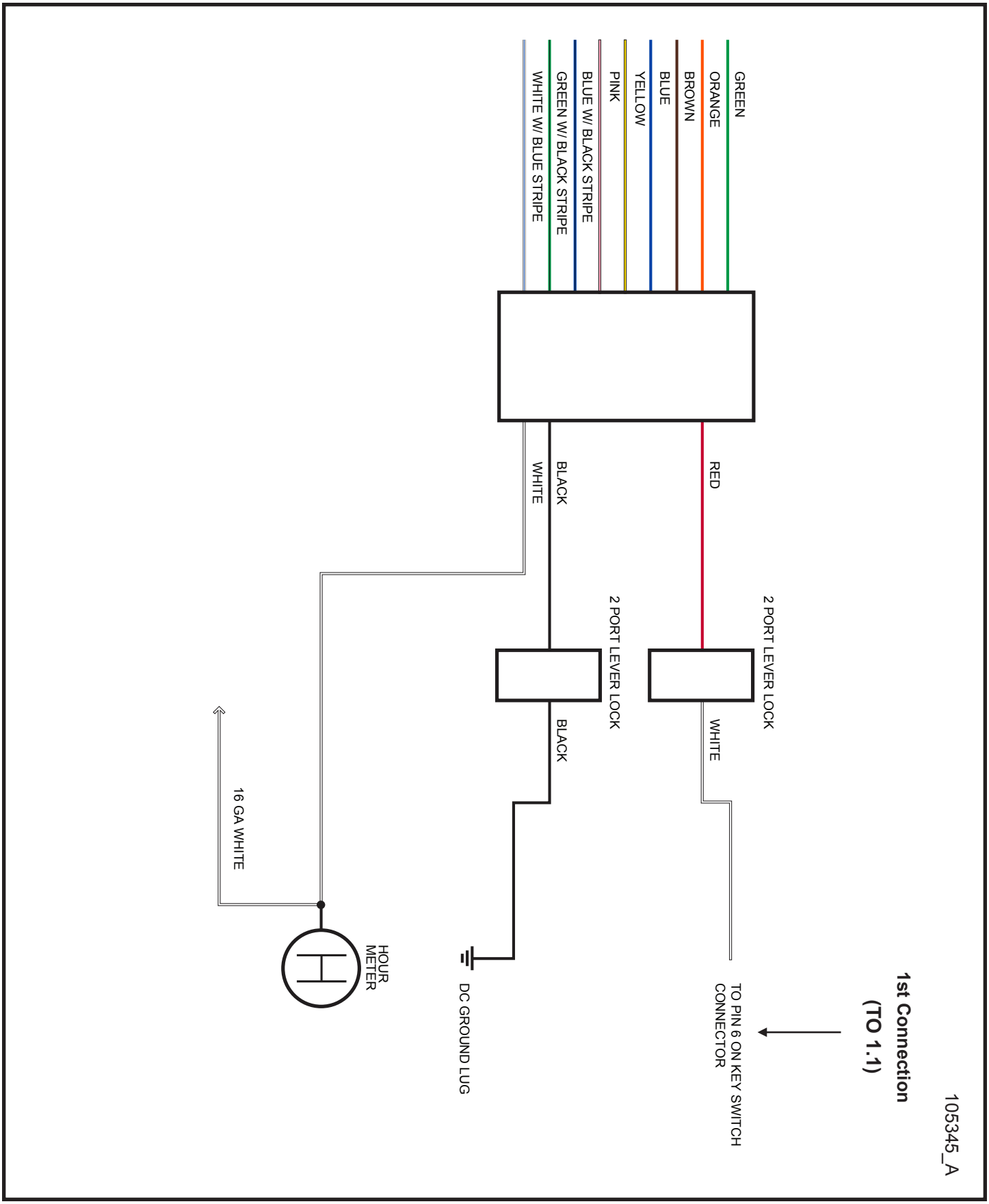

©2016 Allmand™ Bros., Inc.

1.41 - Emergency Stop Schematic

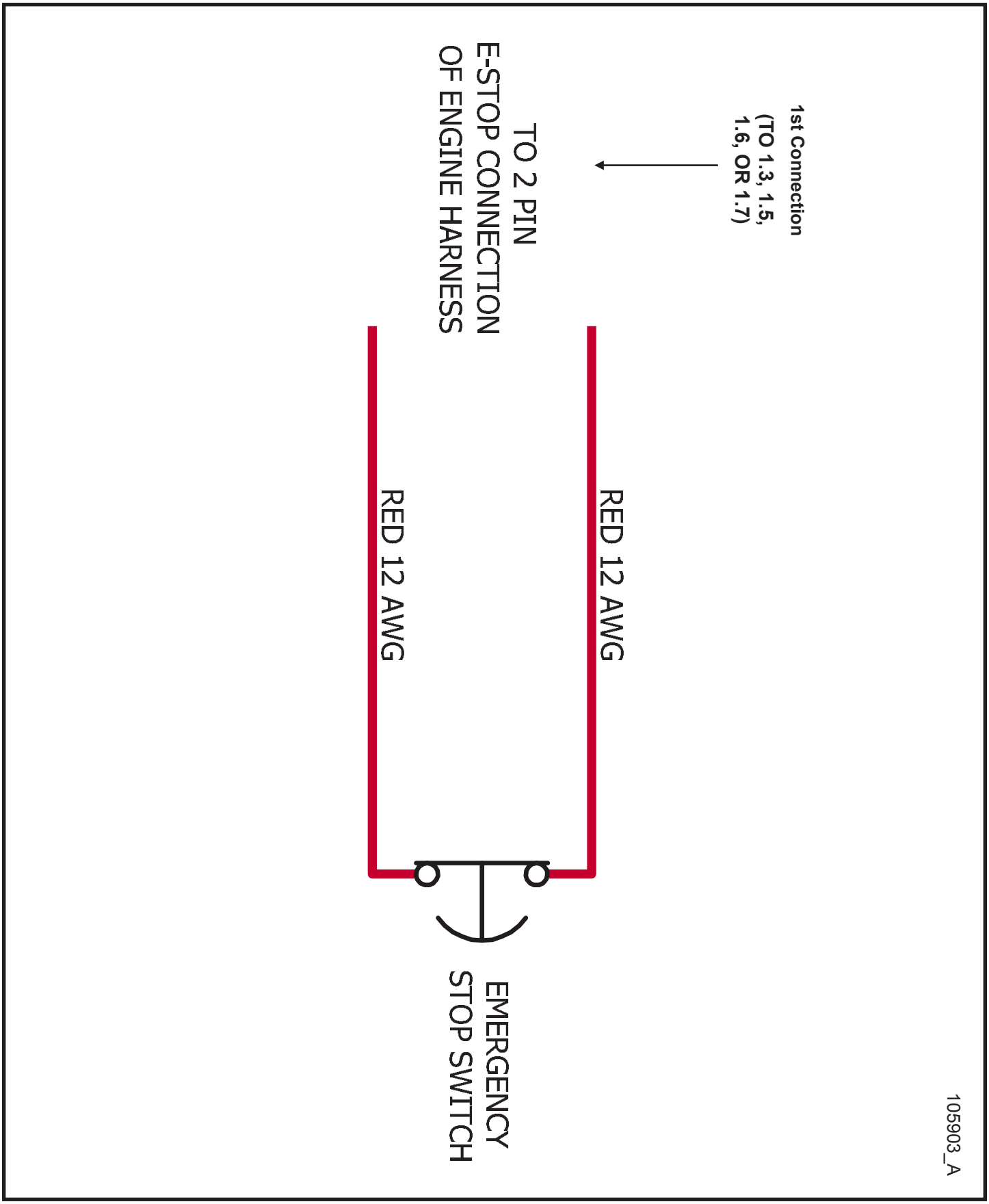

©2016 Allmand™ Bros., Inc.

1.42 - 102 Decibel Alarm Schematic

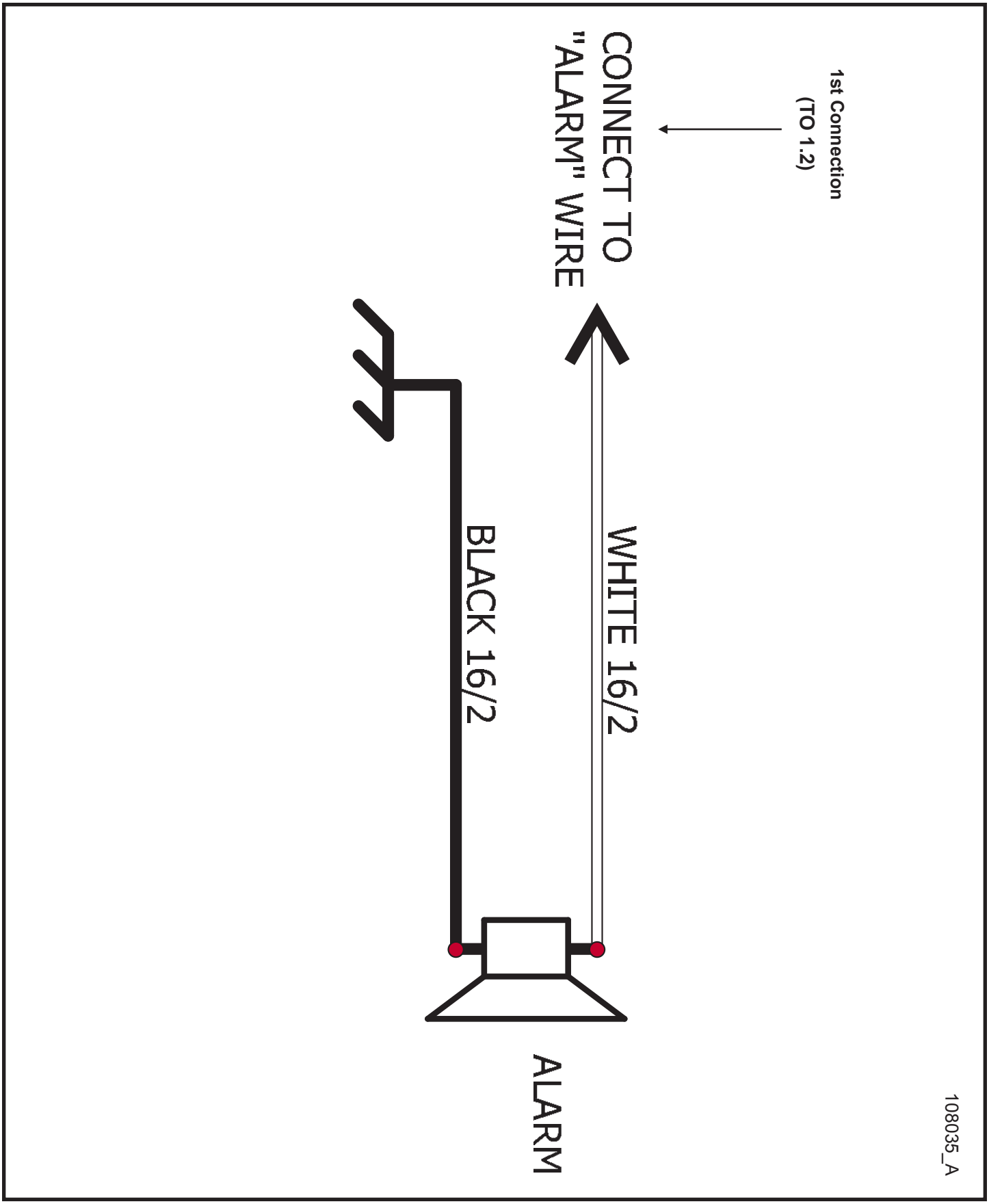

©2016 Allmand™ Bros., Inc.

PAGE LEFT BLANK
INTENTIONALLY

©2016 Allmand™ Bros., Inc.

Allmand™

BRIGHTER. WARMER. SAFER.

Allmand Bros., Inc.
1502 West 4th Avenue
Holdrege, NE 68949
phone: (308) 995-4495 • toll free: (800) 562-1373
fax: (308) 995-5887

www.allmand.com

Reliability, performance, and integrity since 1938

13-0267